OPICO LIMITED
South Road, Bourne, Lincs, PE10 9LG
Tel.: 01778 / 42 11 11 – Fax: 01778 / 42 50 80
ask@opico.co.uk – www.opico.co.uk

Operating Instruction

Pneumatic seed box

AIR 8

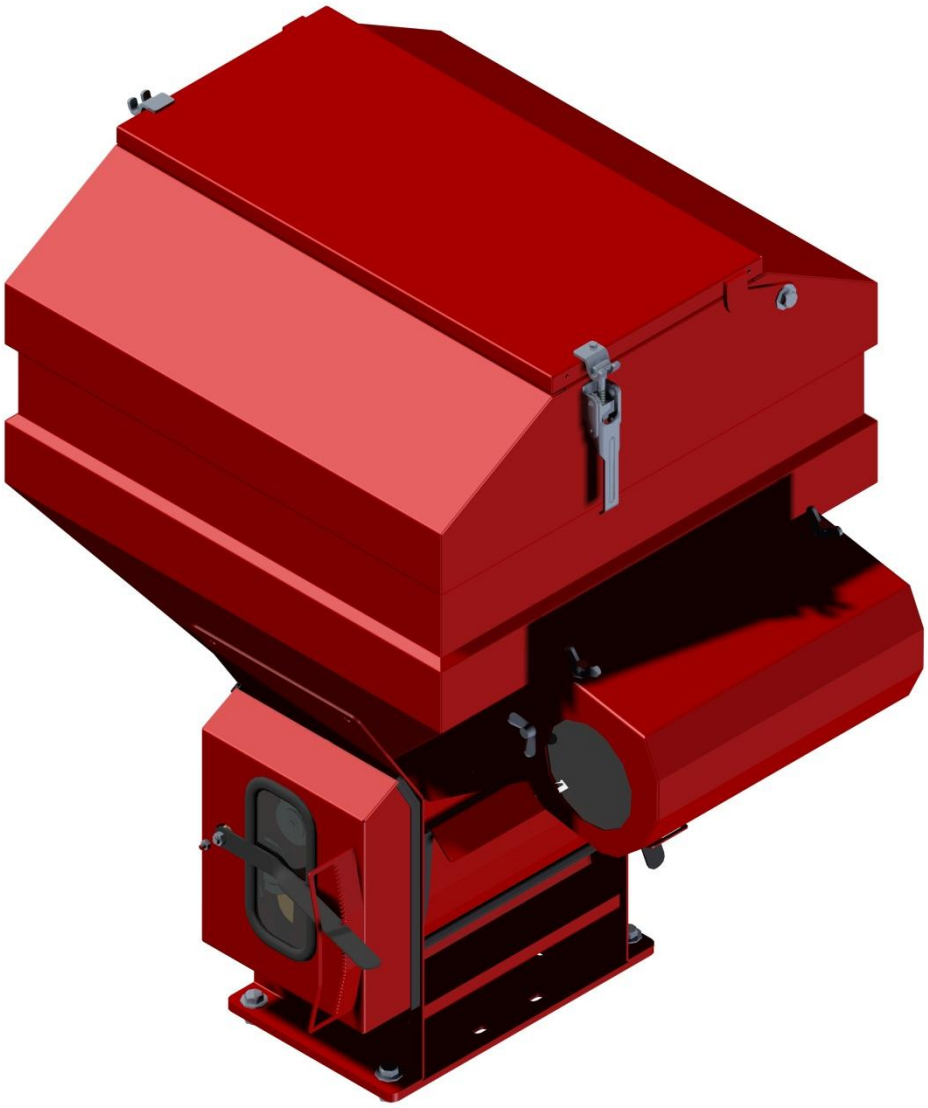

Quality from OPICO

OUR ADVANTAGES ARE LYING IN THE DETAIL

2011

OPICO LIMITED
South Road, Bourne, Lincs, PE10 9LG
Tel.: 01778 / 42 11 11 – Fax: 01778 / 42 50 80
ask@opico.co.uk – www.opico.co.uk

Contents for

Pneumatic seed box

AIR 8

OPICO LIMITED
South Road, Bourne, Lincs, PE10 9LG
Tel.: 01778 / 42 11 11 – Fax: 01778 / 42 50 80
ask@opico.co.uk – www.opico.co.uk

EU-Declaration of Conformity

We, Thomas Hatzenbichler Agro-Technik GmbH
Fischering 2,
A-9433 St. Andrä
(Österreich),

Declare that the new machine described hereafter

Make, Model: **Pneumatic Seed box "Air 8"**

Serial number: _____

Conforms to the relevant essential health and safety requirements of the Directive 89/392/EEC.

- DIN EN 292-1, Safety of machines, tools and equipment
- DIN EN 292-2, Safety of machines, tools and equipment
- DIN EN 294, Safety of machines, tools and equipment
- DIN EN 708, Safety of agricultural machinery and soil tillage equipment
- ÖNORM V 5223, Safety of agricultural trailers
- _____
- _____

Date _____

Thomas HATZENBICHLER
Director

OPICO LIMITED
South Road, Bourne, Lincs, PE10 9LG
Tel.: 01778 / 42 11 11 – Fax: 01778 / 42 50 80
ask@opico.co.uk – www.opico.co.uk

Hints to the pneumatic Seeders „AIR8“for the germination of the seed:

The company Hatzenbichler does not take any responsibility for the

GERMINATION

of seed.

Reason:
We do not know-
1. The condition of the seed
2. the depth which the seed is planted
3. the treatment of the ground before planting
4. on which implement the seeder is mounted

Hints for the work and the sowing for the pneumatic seeders “AIR-Control”, „AIR8“ and „AIR16“:

1. The calibration test has to be done by the costumer on the field.

2. With the pneumatic seeder „AIR Control“ with **8 outlets**, oversowing work can be done up to a working width of 7,50m. **Sowing of ploughed land** can be done up to **3,00m**

3. With the pneumatic seeder „AIR8“ with **8 outlets**, oversowing work can be done up to a working width of 7,50m. **Sowing of ploughed land** can be done up to **3,00m**

4. With the pneumatic seeder „AIR16“ with **16 outlets**, oversowing work can be done up to a working width of 12m. **Sowing of ploughed land** can be done up to **6m**.

OPICO LIMITED
South Road, Bourne, Lincs, PE10 9LG
Tel.: 01778 / 42 11 11 – Fax: 01778 / 42 50 80
ask@opico.co.uk – www.opico.co.uk

ATTENTION !Very important!

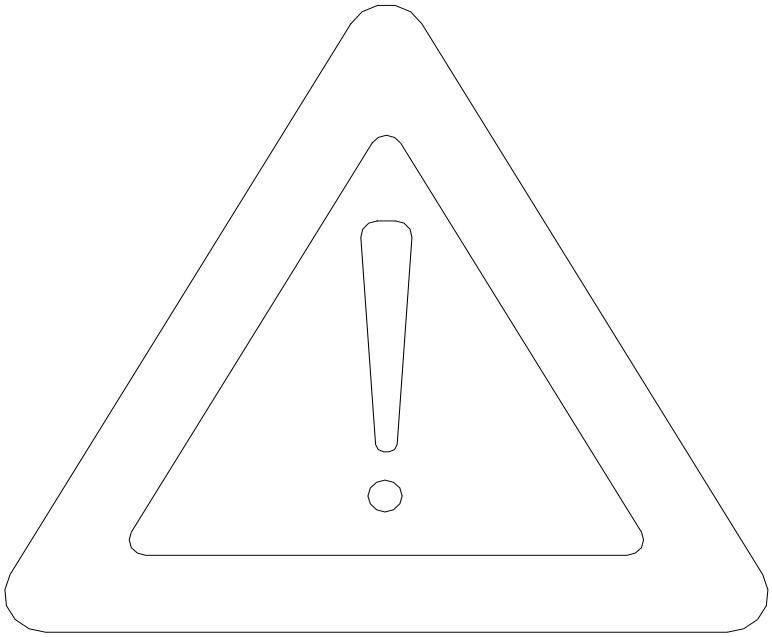

Safety instructions

- Do not remain in the working area of the implement
- It is prohibited to remain in the folding area of the implement during the process of folding – danger of being crushed
- Put a mechanical support to prevent the implement from lowering, if you do repair or maintenance work under the implement in the raised position on the tractor
- Riding on the implement is not allowed, either during transport or during work
- Lower the tractor linkage and machine when leaving the tractor seat (either in folded or unfolded position)
- Take extra care when crossing or driving on slopes

OPICO LIMITED
South Road, Bourne, Lincs, PE10 9LG
Tel.: 01778 / 42 11 11 – Fax: 01778 / 42 50 80
ask@opico.co.uk – www.opico.co.uk

4. Air 8 Fitting Instructions for Grass Harrow

(6mtr model)

4.1) Seed box

1. The pneumatic seed box should be fitted onto the rear support arm of the Grass Harrow approx. 750mm from the headstock, using mounting bracket and bolts supplied. Position so that the electric fans and seed metering mechanism is located at the back of the harrow, the seed pipes will run forward to the distributor outlets
   NOTE: 4.5m & 5m models require an additional mounting bracket (934825) to allow the seed box to be mounted in the centre of the machine
2. The Grass Harrow rear support arm must be bolted with two M14 x 90 bolts supplied, removing the two pins previously used. This is to prevent vibration and wear which may occur with the added weight of seed box mounted
3. The optional operator platform should be mounted behind the seed box on the harrow rear support arm, positioned to suit the operator

OPICO LIMITED
South Road, Bourne, Lincs, PE10 9LG
Tel.: 01778 / 42 11 11 – Fax: 01778 / 42 50 80
ask@opico.co.uk – www.opico.co.uk

4.2) Drive wheel

1. Mount the land drive wheel onto the rear parking stand bottom hole with locating pin supplied, the flexible drive cable should be pointing to the right hand side. On older Grass Harrows you will have to drill a Ø12mm hole 130mm from the base of the parking stand
2. Fit the flexible drive cable support onto the rear support arm r/h side
3. Fit the flexible drive cable between drive wheel and transmission gearbox using the clamps fitted

4.3) Distributor outlets

1. Remove the plastic end caps from the front of each harrow bed carrier and fit the expand clamp into the tube and tighten clamp bolt
2. Fit the C-section distributor carrier (1.5m section 39101) or (2m section 39102) into the clamp holder and set between 20-40cm above ground level
3. Place the distributor outlet onto the C-section carrier bar using bolt supplied, and space evenly to suit the working width e.g. 6m harrow requires 75cm spacing between distributor plates
4. Cut and fit the flexible pipe between seed box outlet and distributor plate, route the pipe allowing for folding wings

Working width	Distributor spacing
3,00 m	37,50 cm
4,50 m	56,25 cm
5,00 m	62,50 cm
6,00 m	75,00 cm
6,50 m	81,25 cm

OPICO LIMITED
South Road, Bourne, Lincs, PE10 9LG
Tel.: 01778 / 42 11 11 – Fax: 01778 / 42 50 80
ask@opico.co.uk – www.opico.co.uk

4.4) Stabiliser bars (6mtr model only)

1. Remove the existing stabiliser bar on both left & right wings and discard.
2. Mount the new stabilising bracket on the wing box section close to the outer section pivot point, the stabiliser will be on the underside of the wing box section.
3. Fit the short stabilising bar and position so that the bed is in the horizontal position.

4.5) Fan power supply

The air fan units require a 12v 30amp electric supply direct from the tractor battery. The two fans are wired separately to the battery, when connected ensure the fans are running in the correct direction, fan blades turning clockwise as you look at it

1. Connect the power cable supplied Ref. Fig. 1, directly to the tractor battery and locate the on/off switch and male 7-pin plug in the tractor cab
2. The seeders unit power cable is supplied with a female 7-pin socket which connects into the tractor fitted power lead
3. The power cable supplied has two in-line fuses (16amp) on the positive lead at the battery

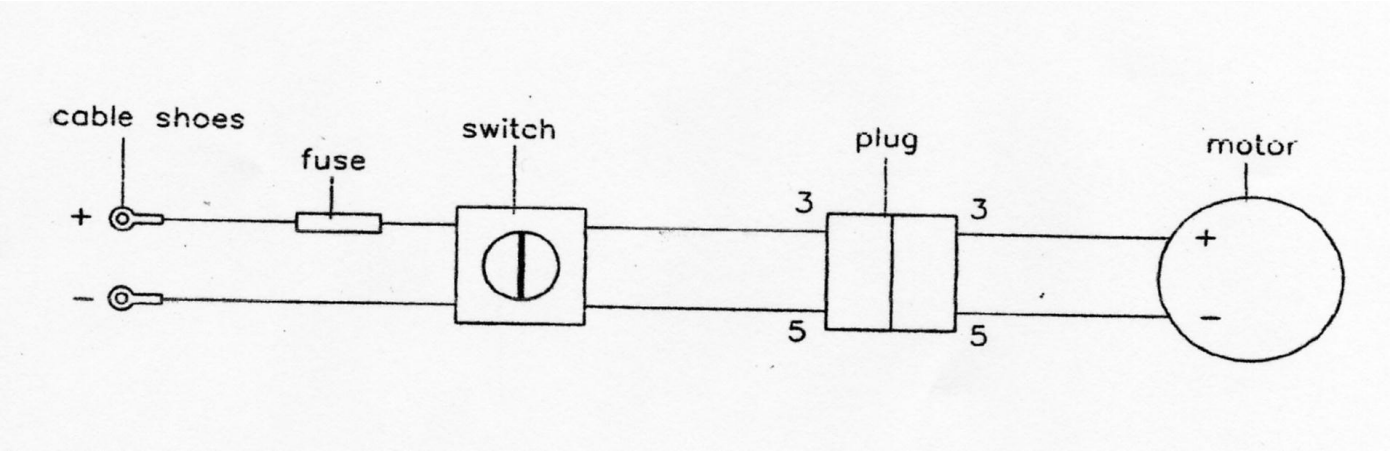

Blue = positive (+)
Green/yellow = positive (+)

Black = negative (-)
Brown = negative (-)

Fig. 1

OPICO LIMITED
South Road, Bourne, Lincs, PE10 9LG
Tel.: 01778 / 42 11 11 – Fax: 01778 / 42 50 80
ask@opico.co.uk – www.opico.co.uk

5. Working instructions - AIR 8

5.1) Basic adjustments

Before filling the hopper, please observe the following points:

1. **Is the correct metering roller fitted?**

   Attention: Choosing the metering roller according to the size of the seed and the quantity to broadcast

   Seeds, where the rough-toothed metering roller is used:

   Grass-seed mixtures, rye, barley, wheat, oats, etc.
   (normally for large seed rates; 10kg/ha ->)

   Seeds, where the fine-toothed metering roller is used:

   Pure clover seeds, rape seed, phacelia, granules etc.
   (normally for small seed rates; < 15kg/ha)

2. **Seed retaining brush adjustment:**

   The distance of the retaining brush from the metering roller can be adjusted by a lever on the right hand side of the hopper. The brush can be adjusted from 1-7mm

   The following rules must be observed:

   - The distance between brush and metering roller is approx. half the seed size

i.e.	Oil seed rape, clover	0-1mm
	Grass-mixtures	1-2mm
	Game cover mixtures	2-3mm

   - The gap on the lower side of the roller should never be more than 1mm (Factory set)

5.2) Changing the seed metering roller

Ensure the seed hopper is completely empty of seed. To change the metering roller, remove the end cap bearing holder on the right hand side of the machine. Slide out the roller, by turning anti-clockwise and pulling at the same time

OPICO LIMITED
South Road, Bourne, Lincs, PE10 9LG
Tel.: 01778 / 42 11 11 – Fax: 01778 / 42 50 80
ask@opico.co.uk – www.opico.co.uk

When fitting another roller, observe the following:

1. Slide the replacement roller onto the drive axle
2. Replace the bearing holder
3. Ensure the spring loaded discs on the ends of the metering roller take up any gap when the bearing holder has been fitted, the discs should not be tight
4. Rotate drive wheel and check that the metering roller turns easily

5.3) Seed roller protection shield

This is mounted inside the hopper to carry the weight of seed in the hopper. It is designed mainly for heavier seeds ie Oil seed rape, slug pellets, etc. When working with lighter seeds ie grass seed be careful to ensure the plate does not encourage bridging in the hopper. If seed bridging is a problem remove the thumb screws and shield from the hopper and work without it fitted.

5.4) Seed rate adjustment

Seed output is changed through an infinitely variable gearbox; the adjustment lever on the left hand side of the seed box has 38 settings. Important – check seed retaining brush is set for correct seed type. The seed rate ranges from 0-40 kg/ha each setting equates to approximately 1 kg/ha - this depends on the seed type

- Moving the lever upwards will increase seed output
- Moving the lever downwards will decrease seed output

Refer to calibration guide – page 15 & 16

5.5) Drive mechanism

Drive wheel
Release the drive wheel from transport position onto the ground. Allowing for constant drive wheel contact over undulations, pin under the drive wheel arm to clear ground when harrow is raised out of work

Drive cable
The flexi-drive cable must be routed using the support arm, ensure sharp bends are avoided and cable is clear of harrow bed. NOTE; Do not reverse the drive wheel rotation

OPICO LIMITED
South Road, Bourne, Lincs, PE10 9LG
Tel.: 01778 / 42 11 11 – Fax: 01778 / 42 50 80
ask@opico.co.uk – www.opico.co.uk

5.6) Calibration

Steps during calibration:

1. Remove the seed metering roller cover
2. Slide the calibration tray into the roller compartment
3. Turn the land drive wheel 50 turns clockwise **(Important: do not turn wheel faster than experienced in field work)**
4. Weigh the seed quantity discharged
5. Put this weight into the calibration formula below

6. **Calibration formula:**

$$\frac{10\,000\ m^2}{(\text{Wheel circumference x turns x working width})} \times \text{seed weight} = \text{Quantity}$$

Example:

Wheel circumference	= 1.35m
Drive wheel turns	= 50 turns
Working width	= 6m
Collected seed	= 0.6kg

$$\frac{10\,000\ m^2}{(1.35 \times 50 \times 6)} \times 0.6\ kg = 14.8\ kg/ha$$

7. By changing the seed output lever upwards or downwards, you will alter the Seed output per ha.
8. Repeat the calibration procedure, until the required output is reached.

5.7) Work in the field

Overseeding:

It is possible to upgrade existing pasture by adding new seed. Harrowing old grass pasture to open up the soil surface before broadcasting new seed is cost effective. The combination of grass harrow and pneumatic seed box will help you get the most from your overseeding programme as it improves weed control, airs the soil and improves conditions for grass seed germination.

Reseeding:

The benefits of increased yield and improved forage quality from reseeding are undoubted. Reseeding into cultivated ground is possible with the harrow and pneumatic seed box, cross drilling in a diamond pattern will ensure good ground cover, but there are several points worth considering to ensure success.

OPICO LIMITED
South Road, Bourne, Lincs, PE10 9LG
Tel.: 01778 / 42 11 11 – Fax: 01778 / 42 50 80
ask@opico.co.uk – www.opico.co.uk

1. Always check pH, phosphate and potash levels prior to sowing (aim for pH 6.5, P2, K2)
2. Make certain the seed bed is fine and firm
3. Roll before as well as after sowing
4. Ensure depth of seed is no more than 15mm
5. Control weeds after establishment
6. Use pesticide control when sowing grass after grass

Before field work check the following:

- Check both fans are working & direction of motion is correct. Run the fan to dry any moisture in the distributor pipes before starting work, this will minimise risk of seed blockage in the pipes
- There should be a minimum of 10kg of seed in the hopper
- The lid of the seed hopper must close air tight
- Set the distributor outlet between 20-40 cm above ground. Harrow tine setting, crop foliage height and seed type will determine the height required to ensure an even spread pattern
- Check all outlets to ensure even seed coverage across the working width

5.8) Emptying the seed hopper

1. Place the calibration tray into the output roller compartment
2. Set the seed output lever and retaining brush lever at maximum and turn the ground drive wheel clockwise until the hopper is empty.
3. To empty completely, remove the metering roller (Ref. to **5.2**)

OPICO LIMITED
South Road, Bourne, Lincs, PE10 9LG
Tel.: 01778 / 42 11 11 – Fax: 01778 / 42 50 80
ask@opico.co.uk – www.opico.co.uk

5.9) Maintenance

Daily

1. Clean the elec fan with compressed air, particularly when working in dusty conditions
2. Check electric cables and connections for damage
3. Check mounting nuts and bolts are tight
4. Check the flexible drive for damage
5. Check the seed agitator is clean and working

Weekly

1. Lubricate and re-tension the transmission drive chain. The chain and tensioner are located on the l/h side of the seed-box, undo the two thumb nuts and remove cover to access the chain and tensioner
2. Lubricate the land drive wheel
3. Lubricate the flexible drive cable
4. Lubricate the metering roller end cap bearing
5. Check all nuts and bolts are tight

NOTE: The transmission gearbox requires no maintenance

5.10) Storage

1. Empty seed hopper completely
2. Clean the unit thoroughly and paint any bare metal
3. Check for any ware or damage and repair as necessary
4. Store the pneumatic seed box under cover to prevent any build-up of moisture in the distributor pipes, seed hopper and metering mechanism.

OPICO LIMITED
South Road, Bourne, Lincs, PE10 9LG
Tel.: 01778 / 42 11 11 – Fax: 01778 / 42 50 80
ask@opico.co.uk – www.opico.co.uk

6. Calibration Guide

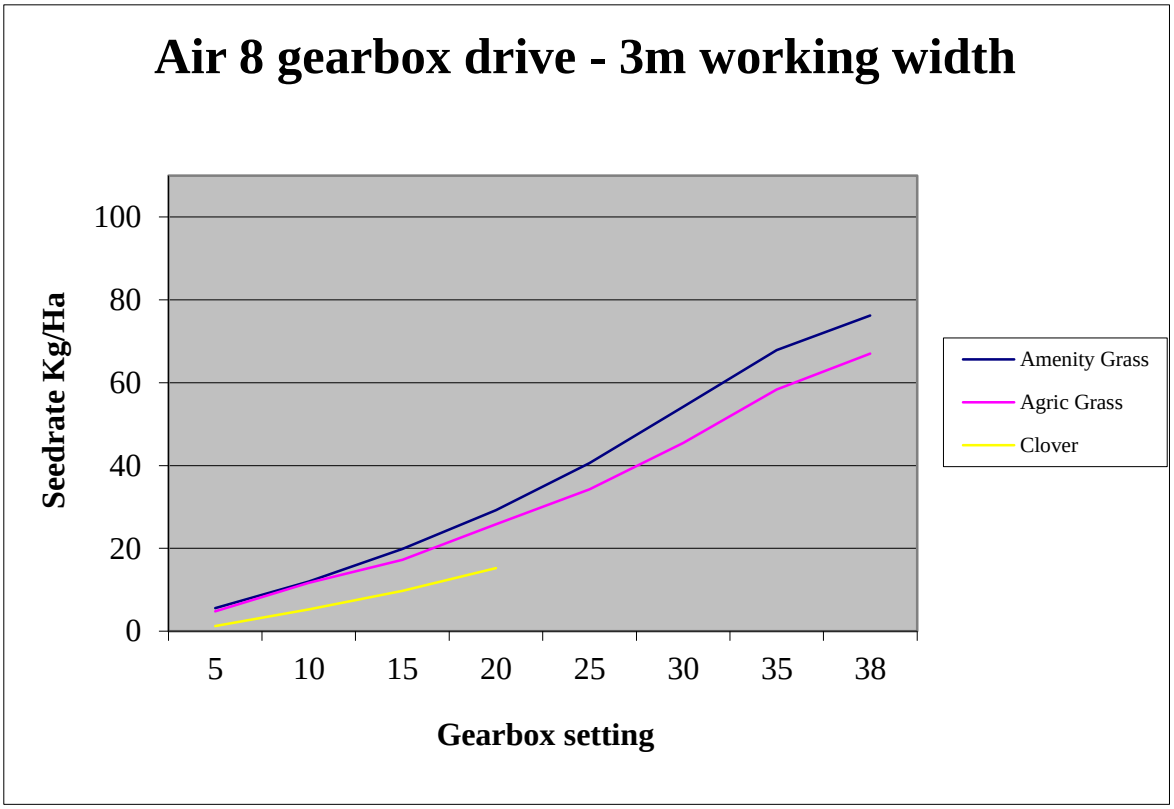

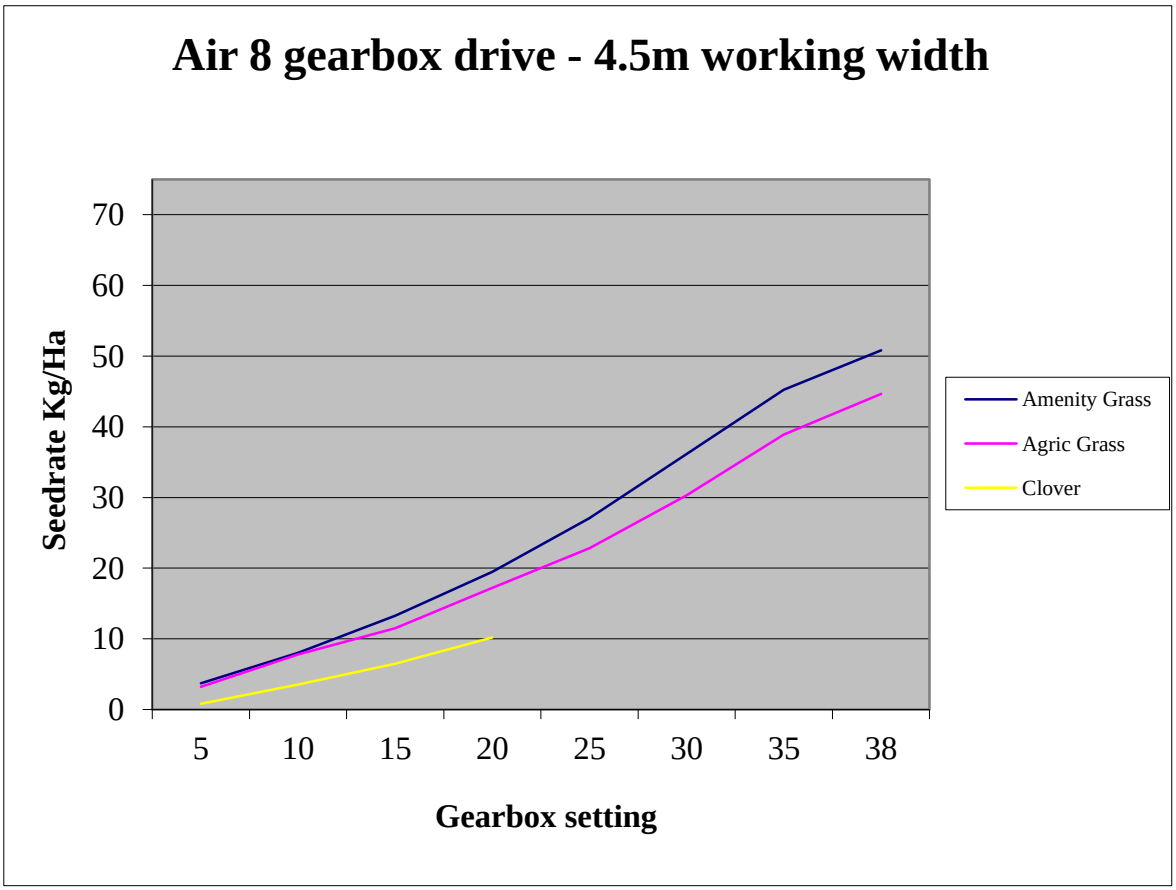

OPICO LIMITED
South Road, Bourne, Lincs, PE10 9LG
Tel.: 01778 / 42 11 11 – Fax: 01778 / 42 50 80
ask@opico.co.uk – www.opico.co.uk

Calibration Guide

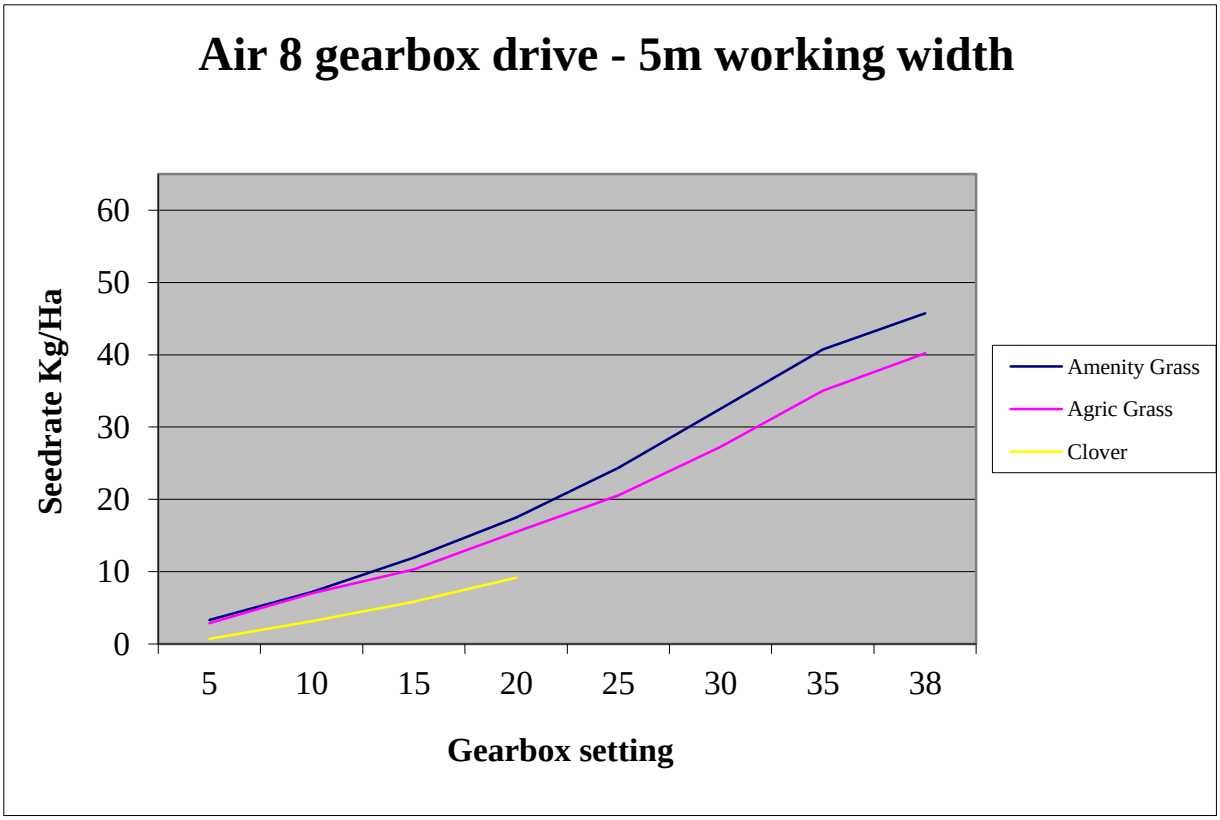

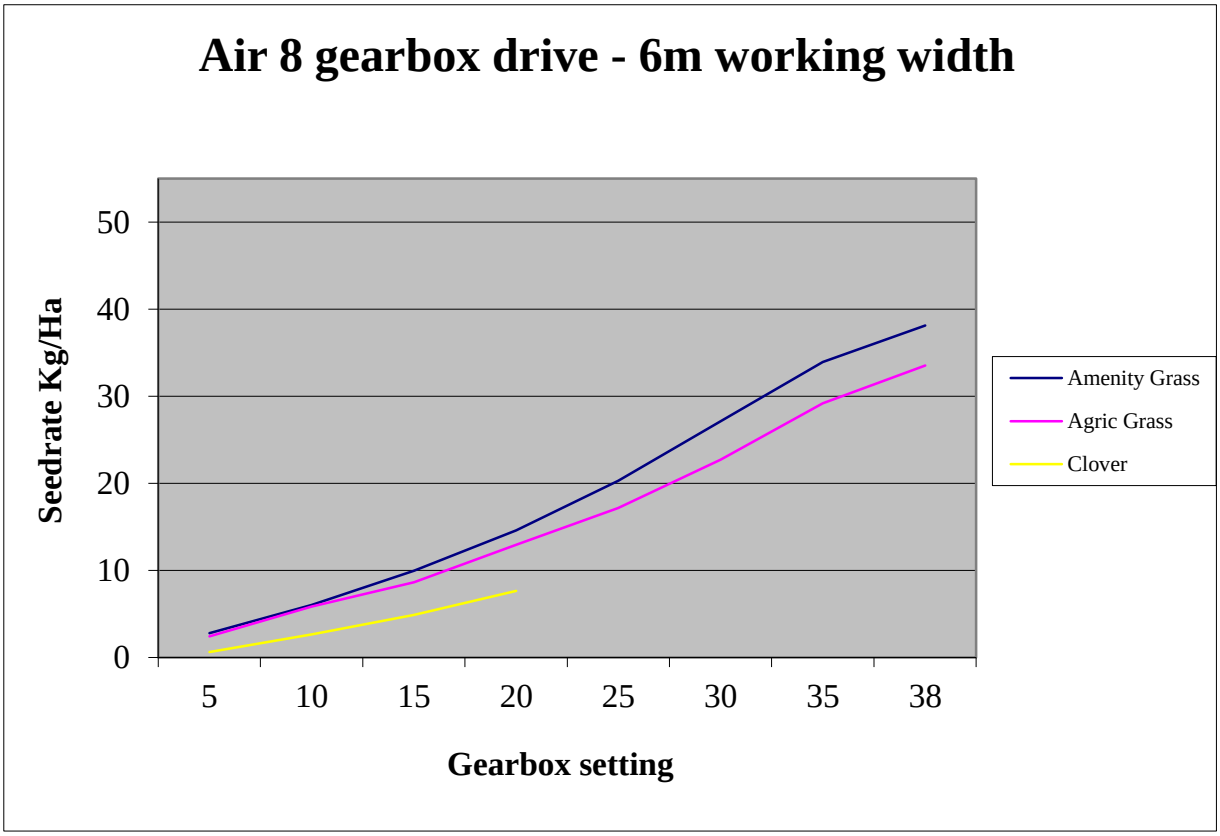

OPICO LIMITED
South Road, Bourne, Lincs, PE10 9LG
Tel.: 01778 / 42 11 11 – Fax: 01778 / 42 50 80
ask@opico.co.uk – www.opico.co.uk

7. Conversion chart

kg		lb
0.5	1	2.2
0.9	2	4.4
1.4	3	6.6
1.8	4	8.8
2.3	5	11.0
2.7	6	13.2
3.2	7	15.4
3.6	8	17.6
4.1	9	19.8
4.5	10	22.0
5.0	11	24.3
5.4	12	26.5
5.9	13	28.7
6.4	14	30.9
6.8	15	33.1
7.3	16	35.3
7.7	17	37.5
8.2	18	39.7
8.6	19	41.9
9.1	20	44.1
9.5	21	46.3
10.0	22	48.5
10.4	23	50.7
10.9	24	52.9
11.3	25	55.1
11.8	26	57.3
12.2	27	59.5
12.7	28	61.7
13.2	29	63.9
13.6	30	66.1
14.1	31	68.3
14.5	32	70.5
15.0	33	72.8
15.4	34	75.0
15.9	35	77.2
16.3	36	79.4
16.8	37	81.6
17.2	38	83.8
17.7	39	86.0
18.1	40	88.2
18.6	41	90.4
19.1	42	92.6
19.5	43	94.8
20.0	44	97.0
20.4	45	99.2
20.9	46	101.4
21.3	47	103.6
21.8	48	105.8
22.2	49	108.0
22.7	50	110.2

ac		ha
2.5	1	0.4
4.9	2	0.8
7.4	3	1.2
9.9	4	1.6
12.4	5	2.0
14.8	6	2.4
17.3	7	2.8
19.8	8	3.2
22.2	9	3.6
24.7	10	4.0
27.2	11	4.5
29.7	12	4.9
32.1	13	5.3
34.6	14	5.7
37.1	15	6.1
39.5	16	6.5
42.0	17	6.9
44.5	18	7.3
47.0	19	7.7
49.4	20	8.1
51.9	21	8.5
54.4	22	8.9
56.8	23	9.3
59.3	24	9.7
61.8	25	10.1
64.2	26	10.5
66.7	27	10.9
69.2	28	11.3
71.7	29	11.7
74.1	30	12.1
76.6	31	12.5
79.1	32	12.9
81.5	33	13.4
84.0	34	13.8
86.5	35	14.2
89.0	36	14.6
91.4	37	15.0
93.9	38	15.4
96.4	39	15.8
98.8	40	16.2
101.3	41	16.6
103.8	42	17.0
106.3	43	17.4
108.7	44	17.8
111.2	45	18.2
113.7	46	18.6
116.1	47	19.0
118.6	48	19.4
121.1	49	19.8
123.6	50	20.2

lb/ac		kg/ha
0.9	1	1.1
1.8	2	2.2
2.7	3	3.4
3.6	4	4.5
4.5	5	5.6
5.4	6	6.7
6.2	7	7.8
7.1	8	9.0
8.0	9	10.1
8.9	10	11.2
9.8	11	12.3
10.7	12	13.5
11.6	13	14.6
12.5	14	15.7
13.4	15	16.8
14.3	16	17.9
15.2	17	19.1
16.1	18	20.2
17.0	19	21.3
17.8	20	22.4
18.7	21	23.5
19.6	22	24.7
20.5	23	25.8
21.4	24	26.9
22.3	25	28.0
23.2	26	29.1
24.1	27	30.3
25.0	28	31.4
25.9	29	32.5
26.8	30	33.6
27.7	31	34.7
28.5	32	35.9
29.4	33	37.0
30.3	34	38.1
31.2	35	39.2
32.1	36	40.4
33.0	37	41.5
33.9	38	42.6
34.8	39	43.7
35.7	40	44.8
36.6	41	46.0
37.5	42	47.1
38.4	43	48.2
39.3	44	49.3
40.1	45	50.4
41.0	46	51.6
41.9	47	52.7
42.8	48	53.8
43.7	49	54.9
44.6	50	56.0

kg/ac		kg/ha
0.4	1	2.5
0.8	2	4.9
1.2	3	7.4
1.6	4	9.9
2.0	5	12.4
2.4	6	14.8
2.8	7	17.3
3.2	8	19.8
3.6	9	22.2
4.0	10	24.7
4.5	11	27.2
4.9	12	29.7
5.3	13	32.1
5.7	14	34.6
6.1	15	37.1
6.5	16	39.5
6.9	17	42.0
7.3	18	44.5
7.7	19	47.0
8.1	20	49.4
8.5	21	51.9
8.9	22	54.4
9.3	23	56.8
9.7	24	59.3
10.1	25	61.8
10.5	26	64.2
10.9	27	66.7
11.3	28	69.2
11.7	29	71.7
12.1	30	74.1
12.5	31	76.6
12.9	32	79.1
13.4	33	81.5
13.8	34	84.0
14.2	35	86.5
14.6	36	89.0
15.0	37	91.4
15.4	38	93.9
15.8	39	96.4
16.2	40	98.8
16.6	41	101.3
17.0	42	103.8
17.4	43	106.3
17.8	44	108.7
18.2	45	111.2
18.6	46	113.7
19.0	47	116.1
19.4	48	118.6
19.8	49	121.1
20.2	50	123.6

kg/ha	g/m²
10	1
20	2
30	3
40	4
50	5
60	6
70	7
80	8
90	9
100	10
110	11
120	12
130	13
140	14
150	15
160	16
170	17
180	18
190	19
200	20
210	21
220	22
230	23
240	24
250	25
260	26
270	27
280	28
290	29
300	30
310	31
320	32
330	33
340	34
350	35
360	36
370	37
380	38
390	39
400	40

OPICO LIMITED
South Road, Bourne, Lincs, PE10 9LG
Tel.: 01778 / 42 11 11 – Fax: 01778 / 42 50 80
ask@opico.co.uk – www.opico.co.uk

turn off agitator

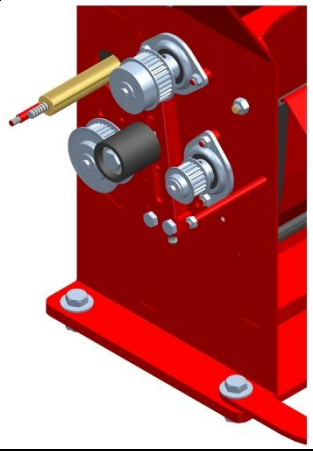	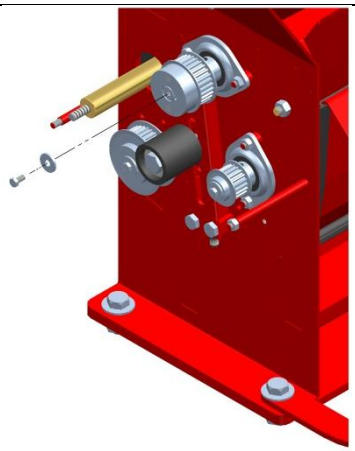	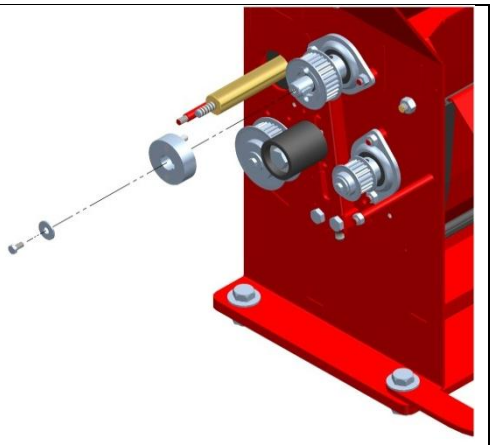
for this procedure you don't have to remove the belt.	1. remove the bolt and the washer	2. remove the clutch
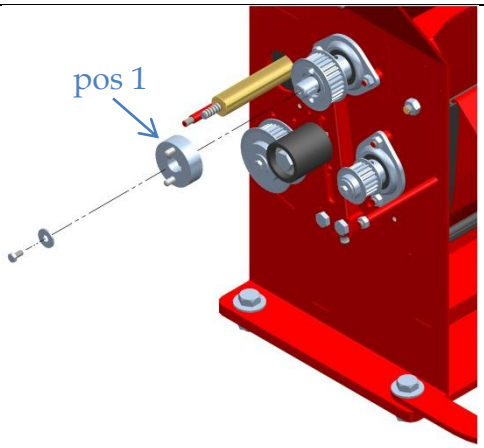	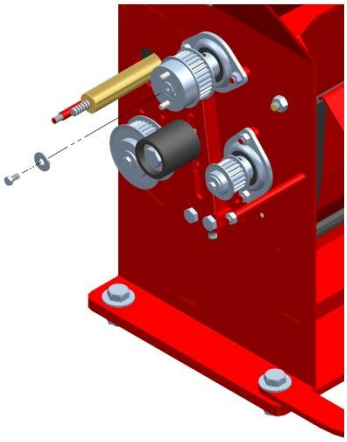	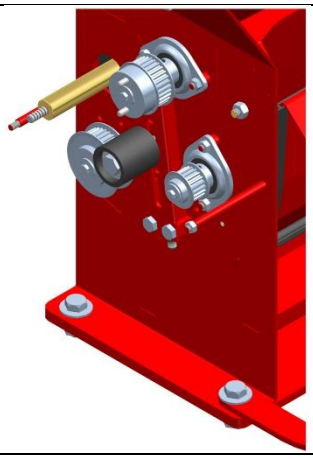
3. turn the clutch (pos 1)	4. connect the turned clutch with bolt and washer	5. now the agitator is turned off

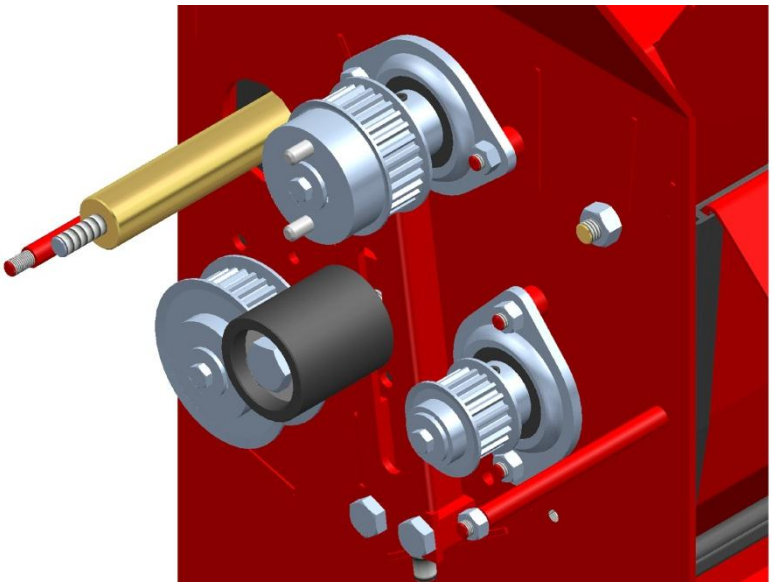

OPICO LIMITED
South Road, Bourne, Lincs, PE10 9LG
Tel.: 01778 / 42 11 11 – Fax: 01778 / 42 50 80
ask@opico.co.uk – www.opico.co.uk

Wiring Diagram

Description	PIN	WIRE Nr.
Motor -	A	1
Motor -	B	2
Motor +	C	3
Motor +	D	4
Grd - Sensors	E	5
+ 12v DC	F	6
Motor Sensor	G	7
Speed Sensor	H	8
Tank Sensor	J	9
Fan Sensor	K	10
Agitator Sensor	L	11
Motor -	M	12
Motor -	N	13
Motor +	P	14
Motor +	R	15/PE
	S	
	T	
	U	
	V	

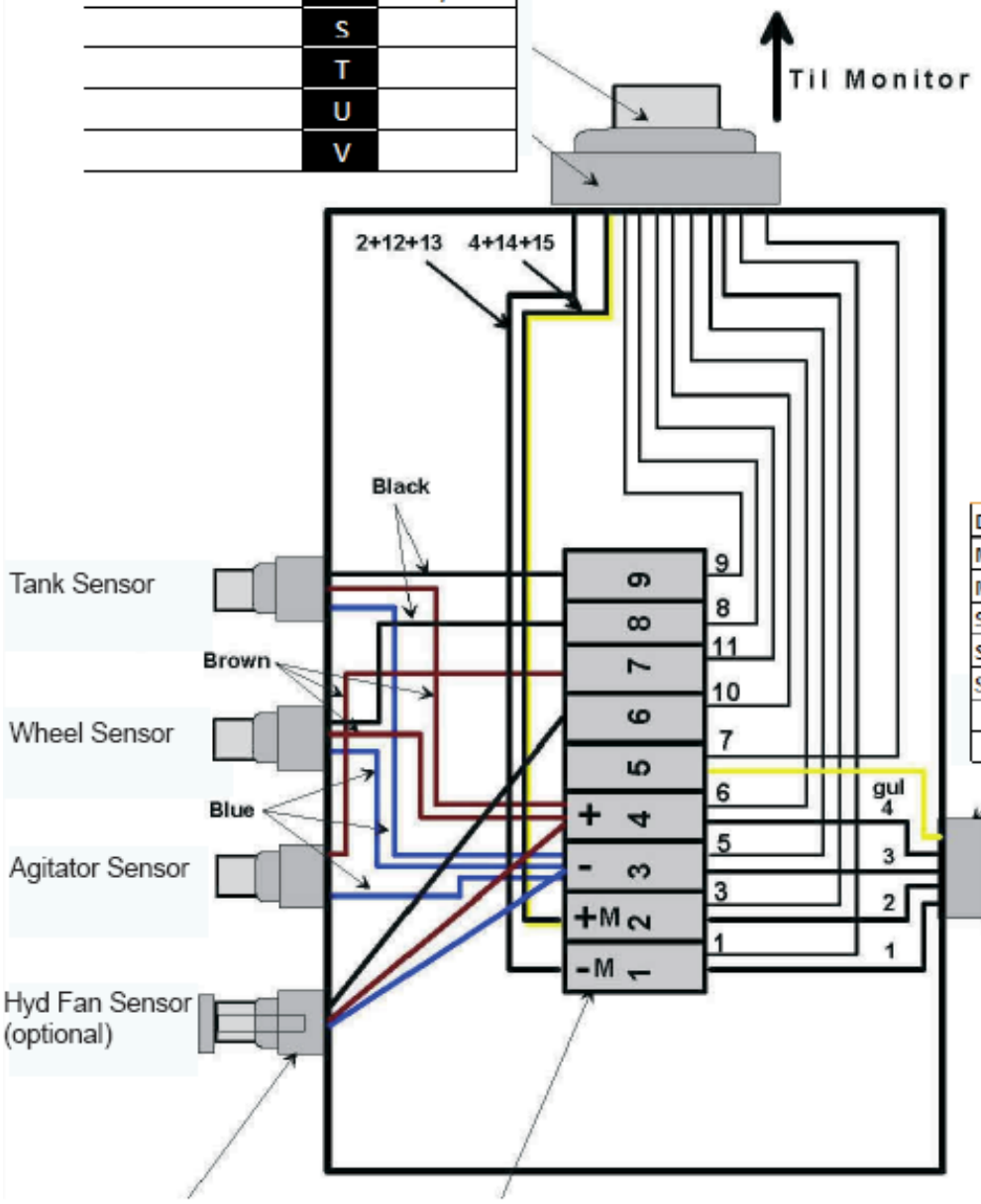

Description	PIN	WIRE Nr.
Motor -	1	1
Motor +	2	2
Sensor -	3	3
Sensor +	4	4
Sensors signal	5	5/PE
	6	
	7	

OPICO LIMITED
South Road, Bourne, Lincs, PE10 9LG
Tel.: 01778 / 42 11 11 – Fax: 01778 / 42 50 80
ask@opico.co.uk – www.opico.co.uk

Spare part list

for

Pneumatic seeder

AIR 8

OPICO LIMITED
South Road, Bourne, Lincs, PE10 9LG
Tel.: 01778 / 42 11 11 – Fax: 01778 / 42 50 80
ask@opico.co.uk – www.opico.co.uk

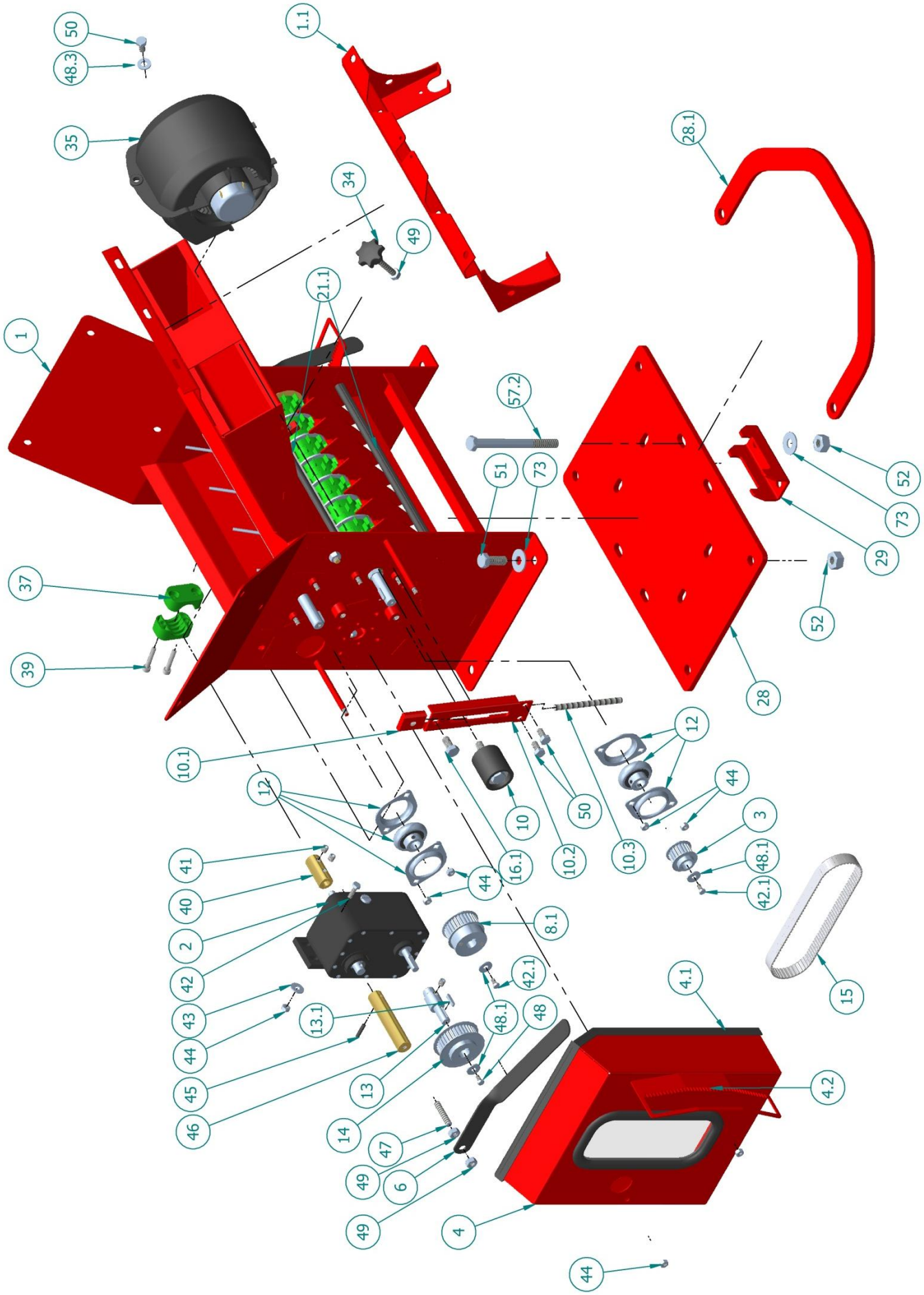

OPICO LIMITED
South Road, Bourne, Lincs, PE10 9LG
Tel.: 01778 / 42 11 11 – Fax: 01778 / 42 50 80
ask@opico.co.uk – www.opico.co.uk

Pos. No.:	**Order nr.:**	
1	930001	seeder base "Air 8"
1.1	93090921	Holding plate for protection plate
2	930002	transmission gearbox
3	9300142	toothed-belt roller, Z=20, Drilling hole 15mm
4	930004	transmission protection guard
4.1	9300041	toothed-belt roller, Z=20, Drilling hole 15mm
4.2	930033	Sticker for scale
6	930006	lever long for seed rate
8.1	94061K	clutch complete
10	9300101	tensioner pulley
10.1	9406K	Clamp for tensioner pulley
10.2	9406F	guiding for tensioner pulley
10.3	9406S	screw M8x100
12	930012	bearing
13	9300131	extension shaft for transmission
13.1	930096	fitting key 4x4x20
14	9300141	toothed-belt roller, Z=36, Drilling hole 12mm
15	93000811	toothed belt AT5-525mm
21.1	9300211	cover plate rubber seal, 90° 300mm long
28	930028	Mounting plate „Air 8"
28.1	39474	Holder for calibration tray
29	94937	Mounting clamp
34	930034	lock complete for cover (bolt with handle) M8x50
35	94985	fan blower
37	930037	plastic clamp 1, size 3
39	930039	Inbusschraube M8x40
40	930040	tappet
41	930041	threaded pin
42	930042	hex bolt M6x20
42.1	93000511	hex bolt M6x35
43	930043	washer M6
44	930044	stop nut M6
45	930045	coiled spring pin 5x22
46	930046	connection
47	930047	threaded shaft M8x40
48	9316	hex bolt M5x10
48.1	930043	washer M6
48.3	930237	big washer M8
49	70012	stop nut M8
50	930050	hex bolt M8x16
51	930051	hex bolt M12x30
52	70013	stop nut M12
57.2	9300572	hex bolt M12x130
73	412124	washer M12

OPICO LIMITED
South Road, Bourne, Lincs, PE10 9LG
Tel.: 01778 / 42 11 11 – Fax: 01778 / 42 50 80
ask@opico.co.uk – www.opico.co.uk

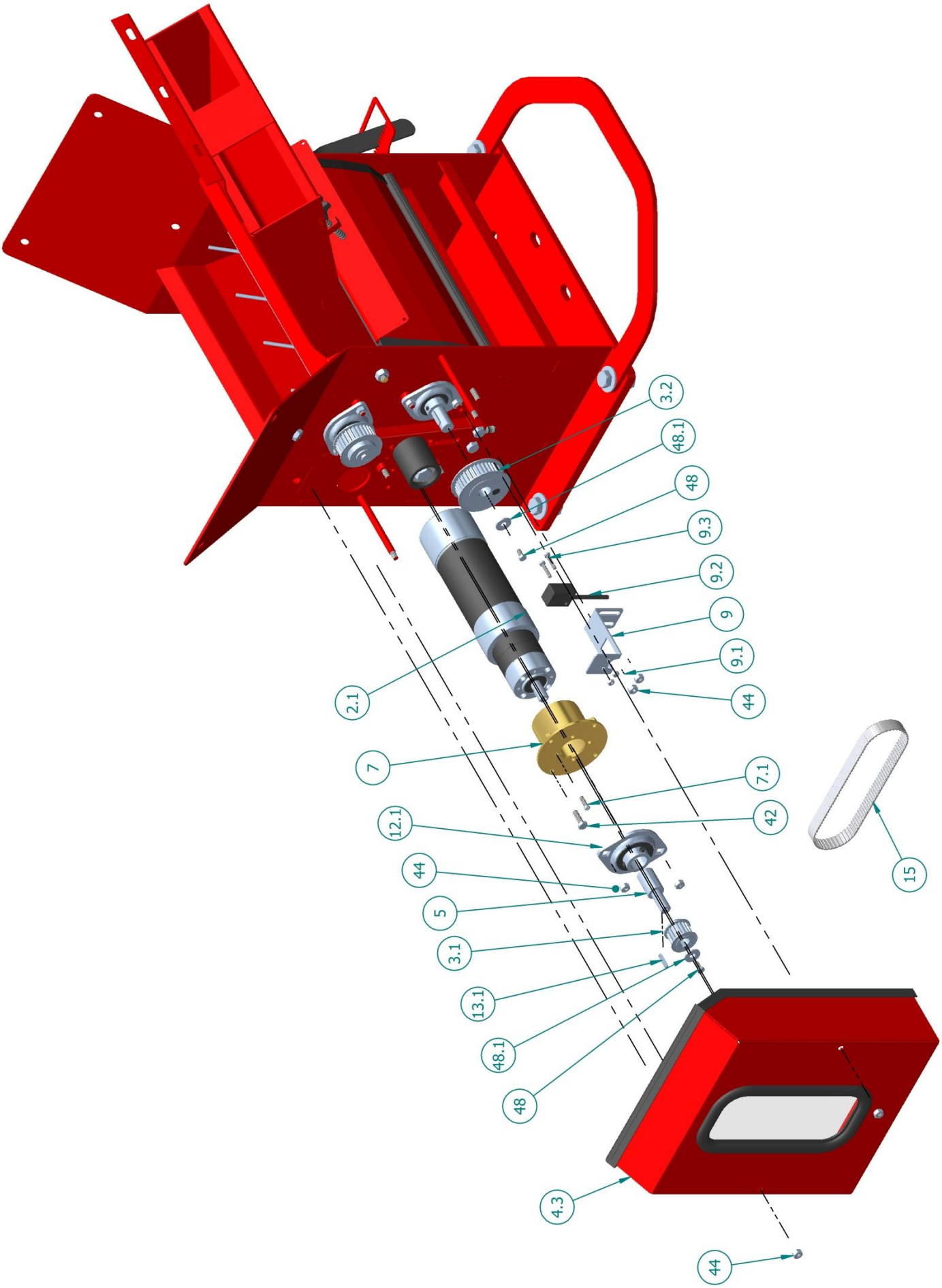

OPICO LIMITED
South Road, Bourne, Lincs, PE10 9LG
Tel.: 01778 / 42 11 11 – Fax: 01778 / 42 50 80
ask@opico.co.uk – www.opico.co.uk

Pos. No.:	**Order nr.:**	
4.3	9310190	protection guard
2.1	931187	electric motor
3.1	9300031	toothed-belt roller, Z=18
3.2	9300141	toothed-belt roller, Z=36 with magnet for sensor
5	93001310	adapter for electric motor
7	930194	adapter plate for electric motor
7.1	930193	screw M5x16
9	8030341	holder for sensor
9.1	4100570	stop nut M4
9.2	51200013	sensor
9.3	4100572	screw M4x20
12.1	9300128	bearing 204
13.1	930096	fitting key 4x4x20
15	93000811	toothed belt AT5-525mm
42	930042	hex bolt M6x20
44	930044	stop nut M6
48	9316	hex bolt M5x10
48.1	930043	washer M6

OPICO LIMITED
South Road, Bourne, Lincs, PE10 9LG
Tel.: 01778 / 42 11 11 – Fax: 01778 / 42 50 80
ask@opico.co.uk – www.opico.co.uk

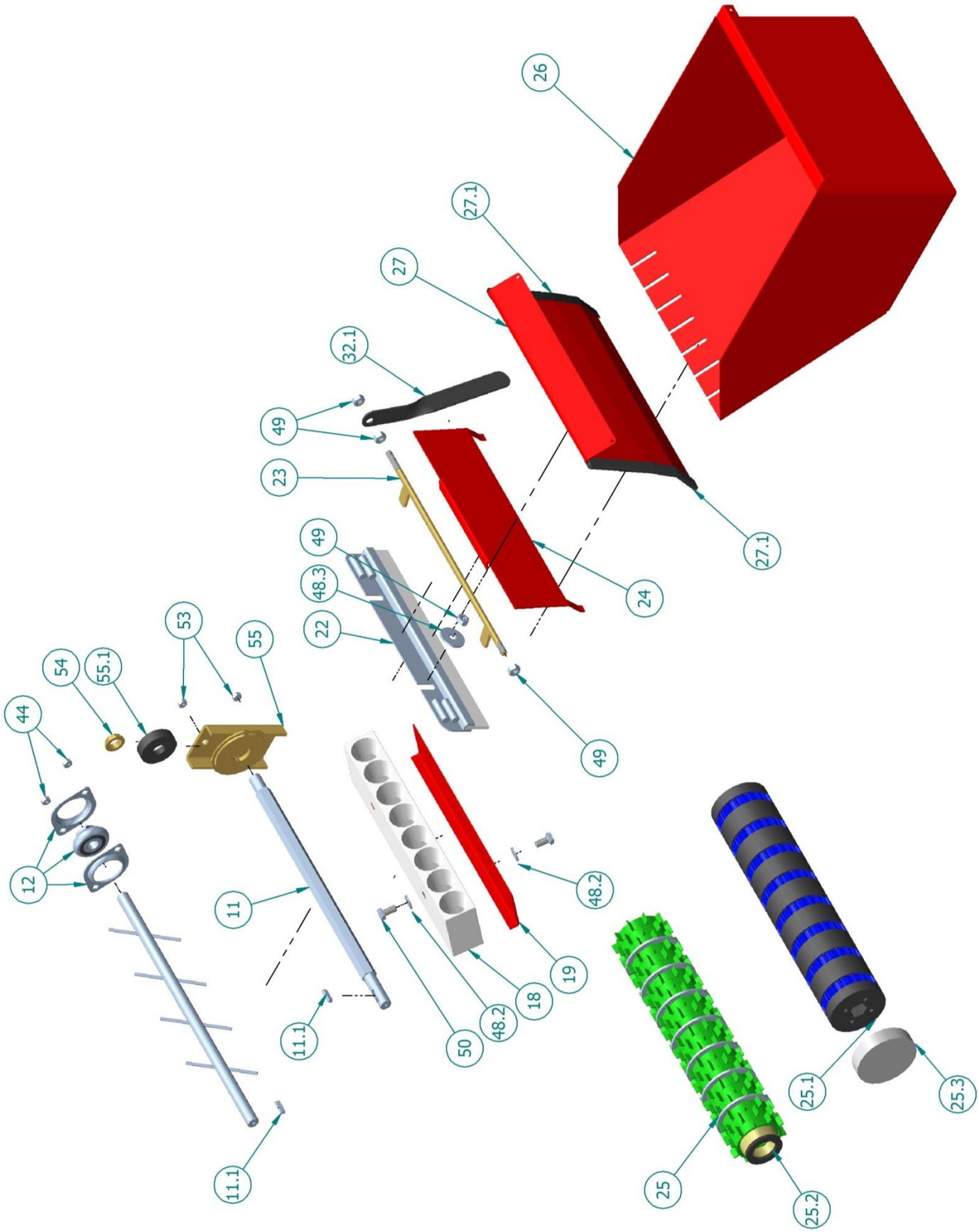

OPICO LIMITED
South Road, Bourne, Lincs, PE10 9LG
Tel.: 01778 / 42 11 11 – Fax: 01778 / 42 50 80
ask@opico.co.uk – www.opico.co.uk

Pos. No.:	**Order nr.:**	
8	9300143	toothed-belt roller, Z=30, Drilling hole 15mm
11	930011	hex. Axle
11.1	930090	fitting key 5x5x20
12	930012	bearing
18	930018	seed pipe manifold, PVC piece with 8 holes
19	930019	hose clamp
22	930022	brush "Air 8"
23	930023	rod for brush adjustment
24	94984	divider plate "Air 8"
25	930025	dosage roller rough "Air 8"
25.1	934822	dosage roller fine "Air 8"
25.2	9311041	foam cover incl. cap
25.3	931088E	end cap for micro roller/
26	394751	calibration tray "Air 8"
27	930027	cover
27.1	9300271	rubber seal for cover, straight 160mm long
32.1	9300320	lever short for brush "Air 8"
42.1	93000511	hex bolt M6x35
44	930044	stop nut M6
48.1	930043	washer M6
48.2	930230	washer M8
48.3	930237	big washer M8
49	70012	stop nut M8
50	930050	hex bolt M8x16
53	930053	nut M6
54	930054	bearing
55	930055	end cap assembly complete with bearing, zinc coated
55.1	9300551	plastic disc for bearing zinc coated

OPICO LIMITED
South Road, Bourne, Lincs, PE10 9LG
Tel.: 01778 / 42 11 11 – Fax: 01778 / 42 50 80
ask@opico.co.uk – www.opico.co.uk

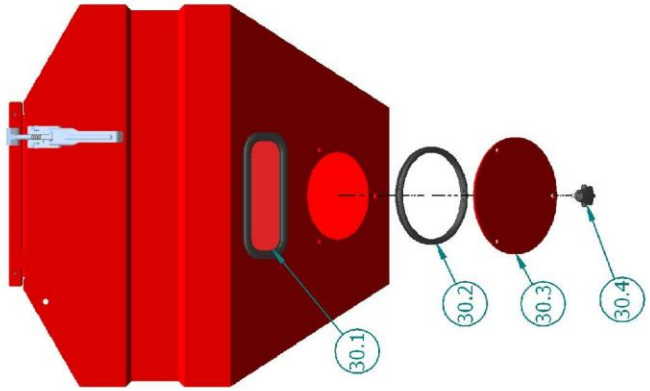

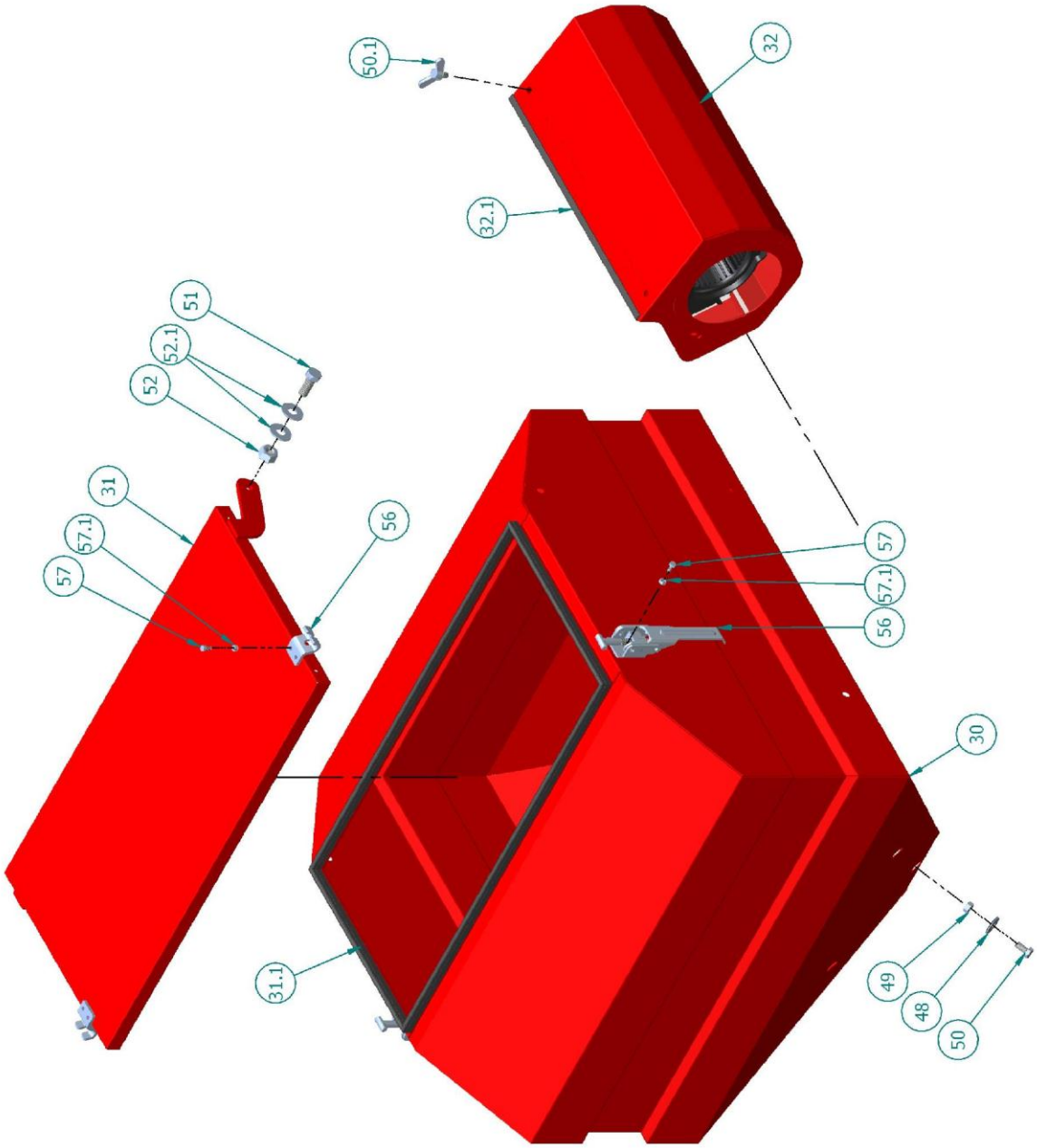

OPICO LIMITED
South Road, Bourne, Lincs, PE10 9LG
Tel.: 01778 / 42 11 11 – Fax: 01778 / 42 50 80
ask@opico.co.uk – www.opico.co.uk

Pos. No.:	**Order nr.:**	
30	930030	seed hopper, "Air 8" 150lt.
30.1	9300301	plexiglas screen and seal
30.2	9300491	seal
30.3	930049	cover
30.4	9310981	toggle screw M8x15
31	39005	hopper lid "Air 8"
31.1	390052	seal for hopper lid
32	930032	blower protection guard
32.1	93003234	lever short for brush "Air 8"
48	9316	hex bolt M5x10
49	70012	stop nut M8
50	930050	hex bolt M8x16
50.1	93003912	wing bolt M8x12
51	930051	hex bolt M12x30
52	70013	stop nut M12
52.1	8009F1	washer M12
56	9300561	lid lock galvanised
57	9300570	hex bolt M5x10
57.1	9300571	nut M5

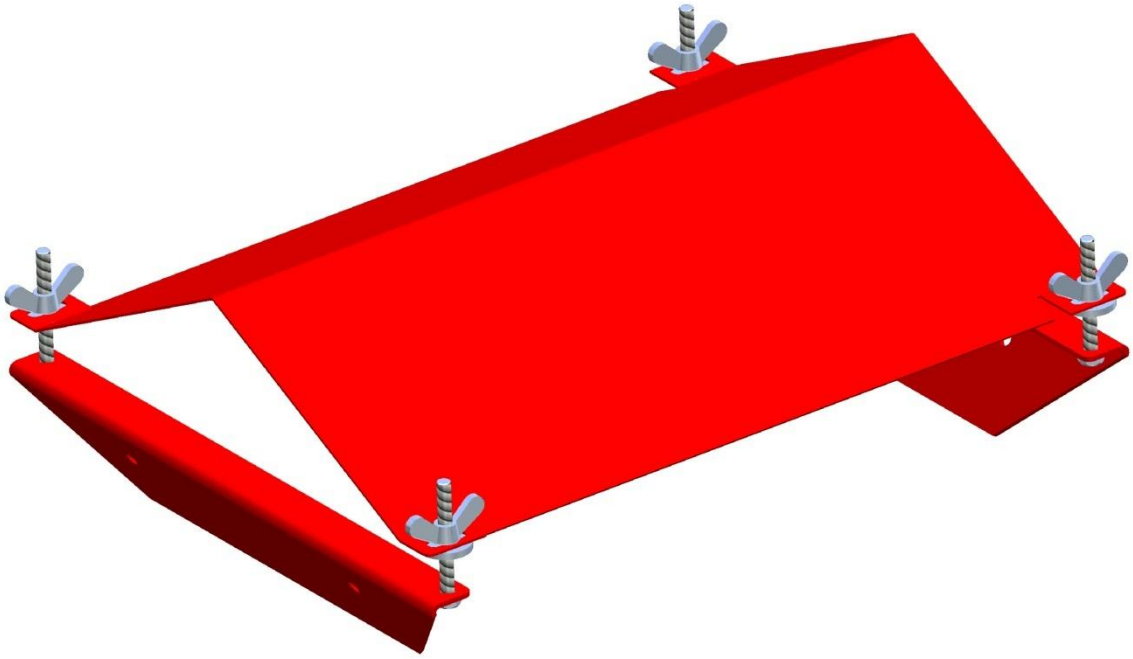

Pos. No.:	**Order nr.:**	
	930092	2 x L-part f. seed roller protection shield, 4 x toggle screws M8

OPICO LIMITED
South Road, Bourne, Lincs, PE10 9LG
Tel.: 01778 / 42 11 11 – Fax: 01778 / 42 50 80
ask@opico.co.uk – www.opico.co.uk

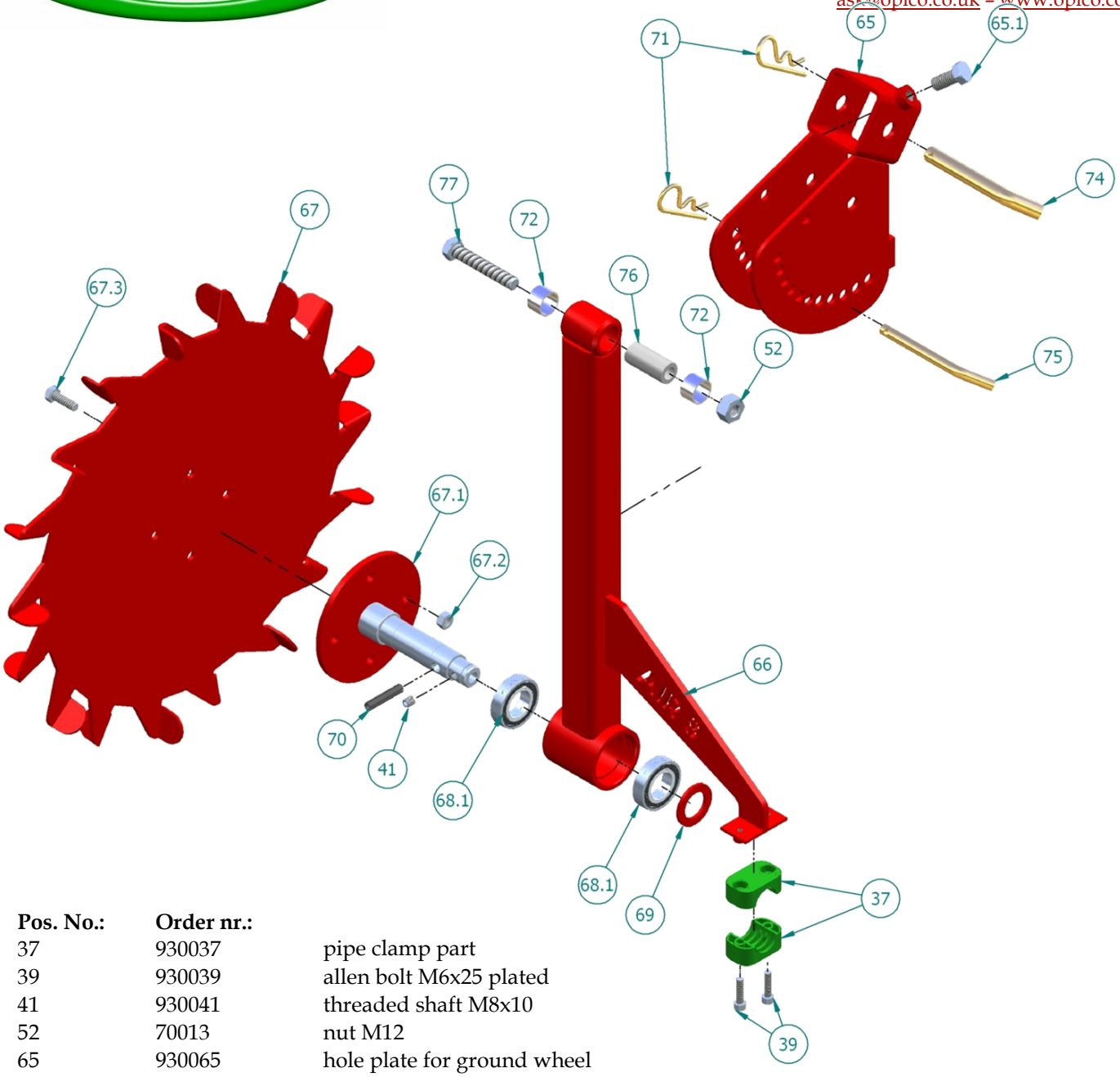

Pos. No.:	Order nr.:	
37	930037	pipe clamp part
39	930039	allen bolt M6x25 plated
41	930041	threaded shaft M8x10
52	70013	nut M12
65	930065	hole plate for ground wheel
65.1	930052	hex bolt M12x25
66	930066	holder for drive wheel
67	930067	drive wheel
67.1	80312SP	adapter for drive wheel
67.2	70036	stop nut M8
67.3	9300392	hex bolt M8x25
68.1	60052Z	bearing 6005 2Z
69	930069	distance ring
70	95128	roll pin 8x40
71	930224	spring pin d=4mm
72	9414	glacier bush 23/20/15
74	930074	pin d=14
75	930075	pin d=10
76	930076	distance tube l=46
77	93225	screw M12x70

OPICO LIMITED
South Road, Bourne, Lincs, PE10 9LG
Tel.: 01778 / 42 11 11 – Fax: 01778 / 42 50 80
ask@opico.co.uk – www.opico.co.uk

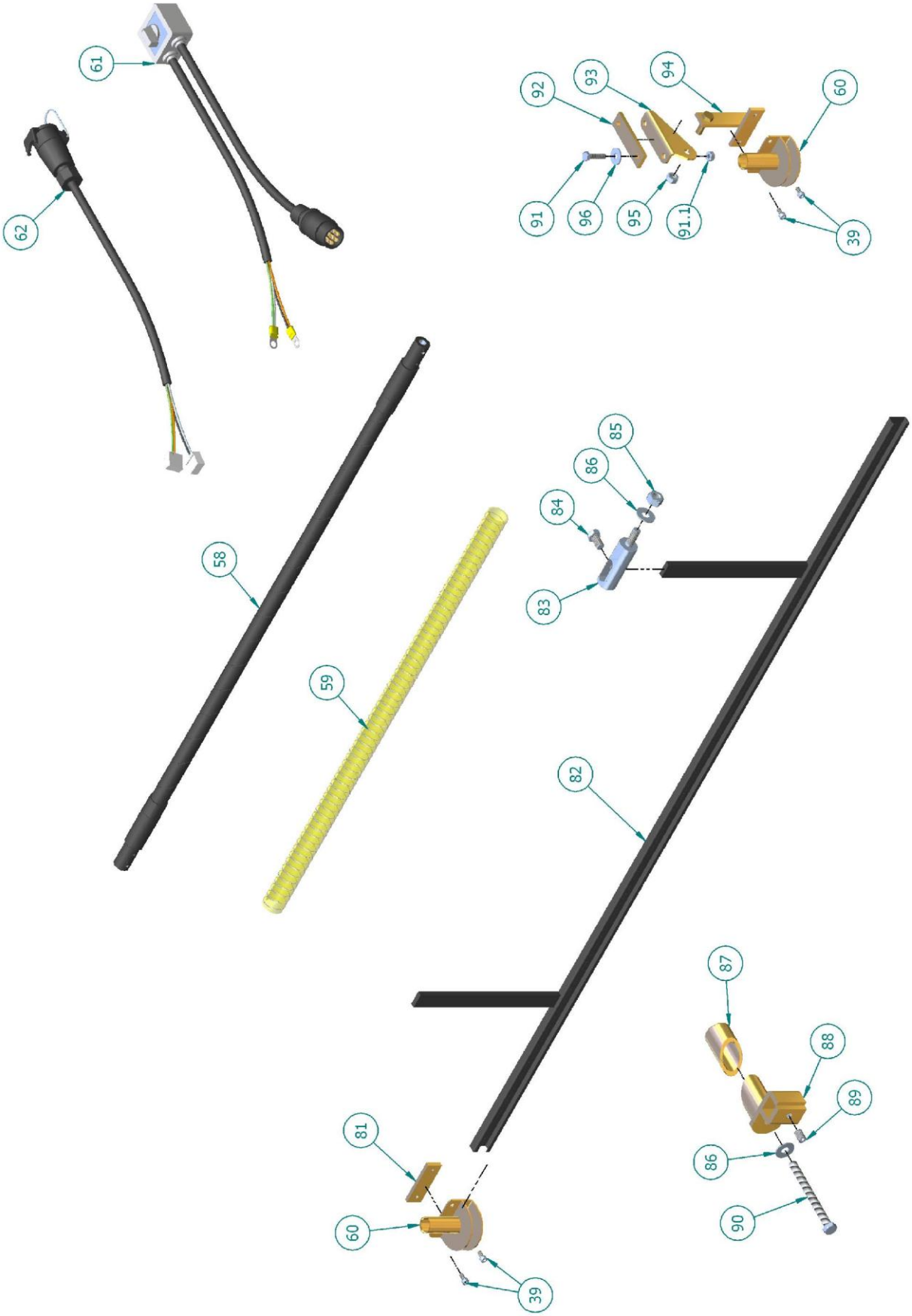

OPICO LIMITED
South Road, Bourne, Lincs, PE10 9LG
Tel.: 01778 / 42 11 11 – Fax: 01778 / 42 50 80
ask@opico.co.uk – www.opico.co.uk

Pos. No.:	Order nr.:	
39	930039	allen bolt M6x25 plated
58	934821	drive shaft 2.4 mtr
	9348214	drive shaft 2.65 mtr
	9348215	drive shaft 3.0 mtr
	9348216	drive shaft 3.5 mtr
	9348217	drive shaft 4.0 mtr
59	930059	seed hose
60	949832	distributer
61	931084	cable part 1 (from battery, with switch to the plug)
62	931085	cable part 2 (from the plug to the electric motor)
81	949831	bracket 25x70x6
82	39111	c-profile / m
82.1	391011	c-profile l=1,50m
82.2	391022	c-profile l=2,00m
83	80272	holder for c-profile;V6
84	930214	hex bolt M12x20
85	8009F	washer M12
86	70018	nut M12
87	93935	expand bracket 1
88	93934	expand bracket 2
89	930220	allen screw M12x20
90	930219	hex bolt M12x130
91	9316S	hex bolt M8x30 with nut
91.1	70036	nut M8
92	949833	bracket 90x25x6
93	949834	bracket to fit distributor in bed, part 1
94	949835	bracket for distributor in bed
95	70017	stop nut M10
96	930230	washer M8

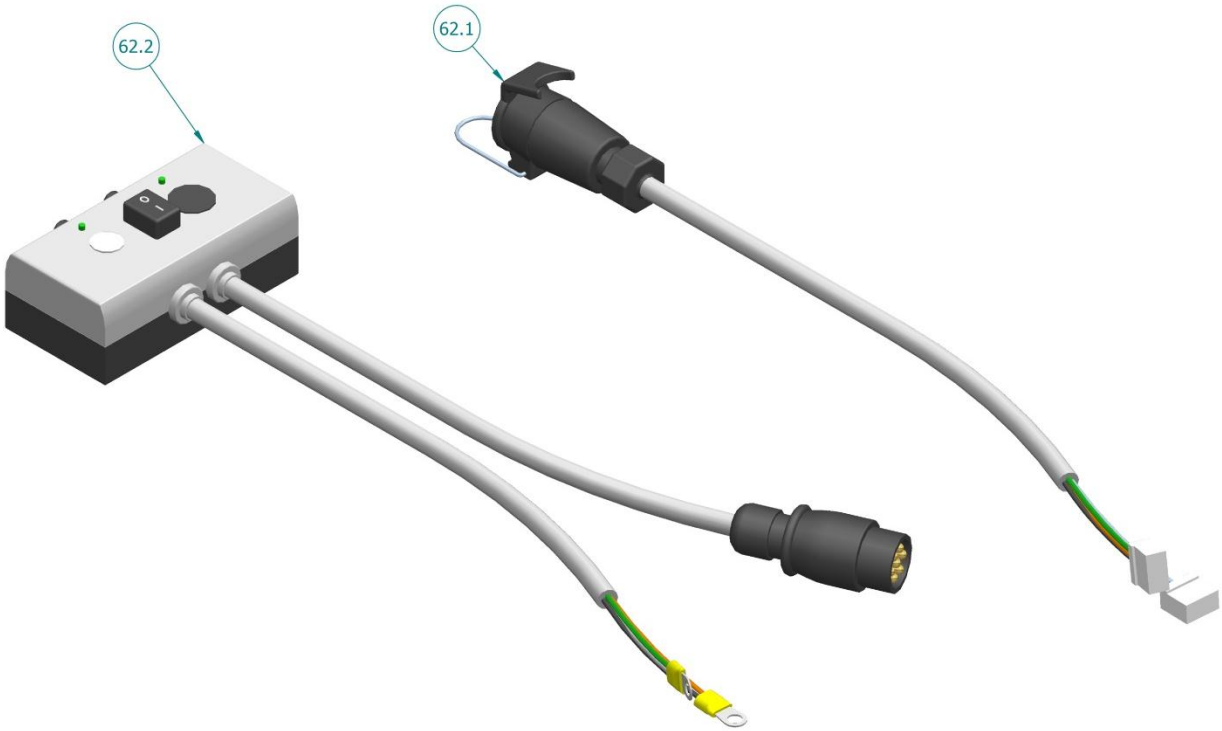

Pos. No.:	Order nr.:	
62.1	9310802	electric cable (part 2 on Air 8)
62.2	9310801	electric cable (switch)

OPICO LIMITED
South Road, Bourne, Lincs, PE10 9LG
Tel.: 01778 / 42 11 11 – Fax: 01778 / 42 50 80
ask@opico.co.uk – www.opico.co.uk

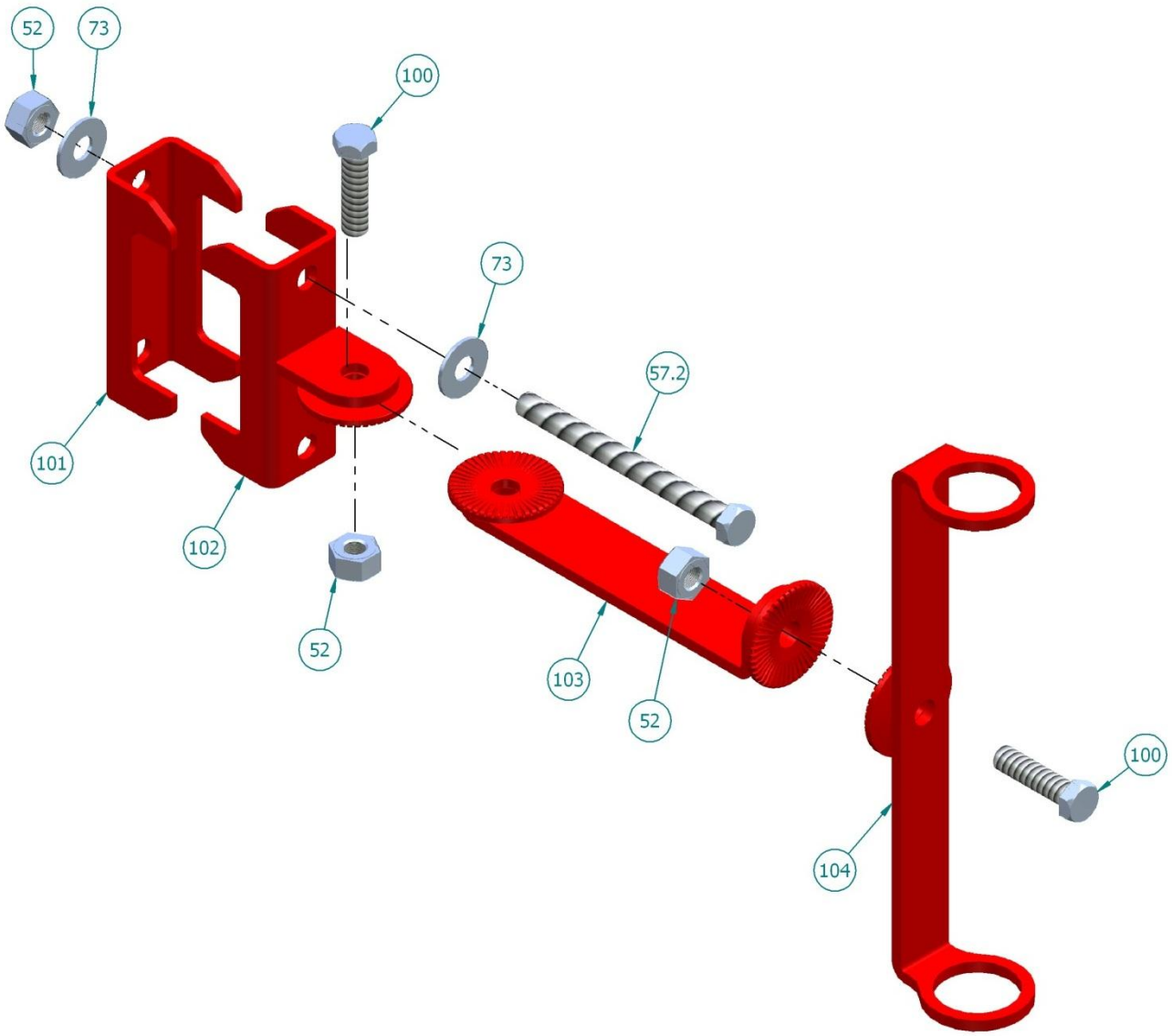

Pos. No.:	Order nr.:	
52	70013	stop nut M12
57.2	9300572	hex bolt M12x130
73	412124	washer M12
100	94938	clamp for tube 80
101	94935	clamp for tube 80 incl. lock washer
102	803033	bracket for drive cable – part 1
103	803034	bracket for drive cable – part 2

On-Board Computer

Operator's Manual

Rev. 1.00

THOMAS HATZENBICHLER Agro-Technik GmbH
A-9433 St. Andrä, Fischering 2
Tel: ++43 (0)4358 / 2287–0 / Fax:++43 (0)4358 / 2208
http://www.hatzenbichler.com
agrotechnik@hatzenbichler.com

Table of Contents

THOMAS HATZENBICHLER Agro-Technik GmbH
A-9433 St. Andrä, Fischering 2
Tel: ++43 (0)4358 / 2287–0 / Fax:++43 (0)4358 / 2208
http://www.hatzenbichler.com
agrotechnik@hatzenbichler.com

Overview

Hatzenbichler on-board computer with wiring loom and accessories for an Air 8 electric or Air 16 seed box.

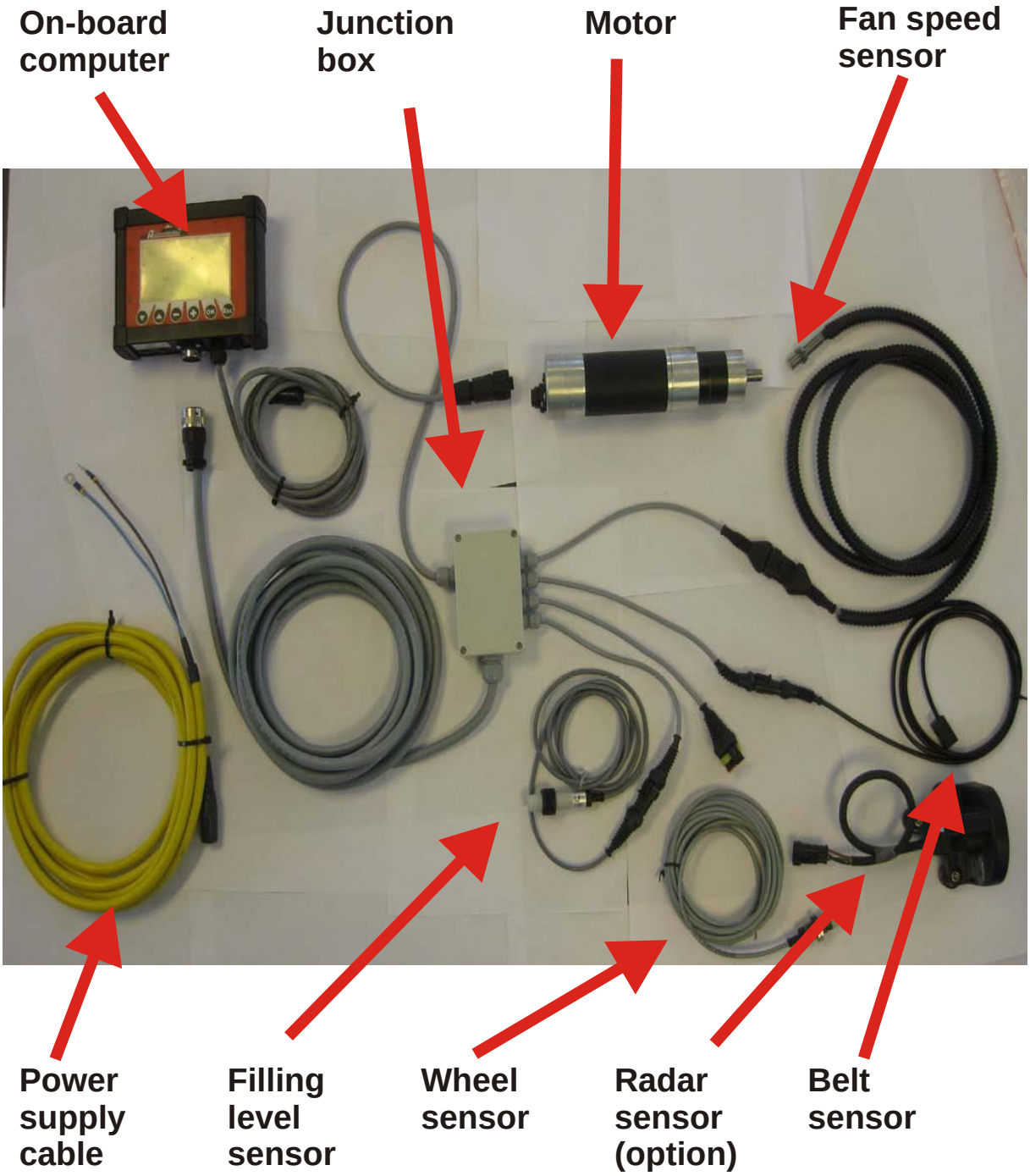

THOMAS HATZENBICHLER Agro-Technik GmbH
A-9433 St. Andrä, Fischering 2
Tel: ++43 (0)4358 / 2287–0 / Fax:++43 (0)4358 / 2208
http://www.hatzenbichler.com
agrotechnik@hatzenbichler.com

Hatzenbichler On-Board Computer – Operator's Manual

This Operator's Manual covers the operation of the on-board computer which comes with the pneumatic seeders Air 8 (electronic) and Air 16.

You must have read and understood this manual before starting up the on-board computer.

The on-board computer is for controlling the motor of the metering roller based on pulses from a wheel-driven sensor or radar sensor.

The Hatzenbichler on-board computer allows the user to store different seed rates and assign to them names and the corresponding calibration quantity.

The on-board computer offers various checking and monitoring features, such as

- Speed display (in km/h)
- Actual seed rate

- Elapsed time

- Distance counter

- Hectare counter

- Used seed

- Filling level

- Belt
- Motor
- Speed control

The computer signals problems by means of an acoustic alarm signal and shows an error message on its display.

THOMAS HATZENBICHLER Agro-Technik GmbH
A-9433 St. Andrä, Fischering 2
Tel: ++43 (0)4358 / 2287–0 / Fax:++43 (0)4358 / 2208
http://www.hatzenbichler.com
agrotechnik@hatzenbichler.com

Controls


The **„UP“** arrow lets you navigate to the menu items you want to work with.


The **„DOWN“** arrow lets you navigate to the menu items you want to work with.


The "**-**" key is for decrementing values.


The "**+**" key is for incrementing values.


The **„OK“** key stores any value or alteration made to the computer.


The **„ESC“** key lets you exit the active window and takes you one step back.


The **„DigiPot“** lets you increment/decrement values to be entered by turning the knob CW/CCW.

THOMAS HATZENBICHLER Agro-Technik GmbH
A-9433 St. Andrä, Fischering 2
Tel: ++43 (0)4358 / 2287–0 / Fax:++43 (0)4358 / 2208
http://www.hatzenbichler.com
agrotechnik@hatzenbichler.com

Controls and Interfaces at the Bottom of the On-Board Computer

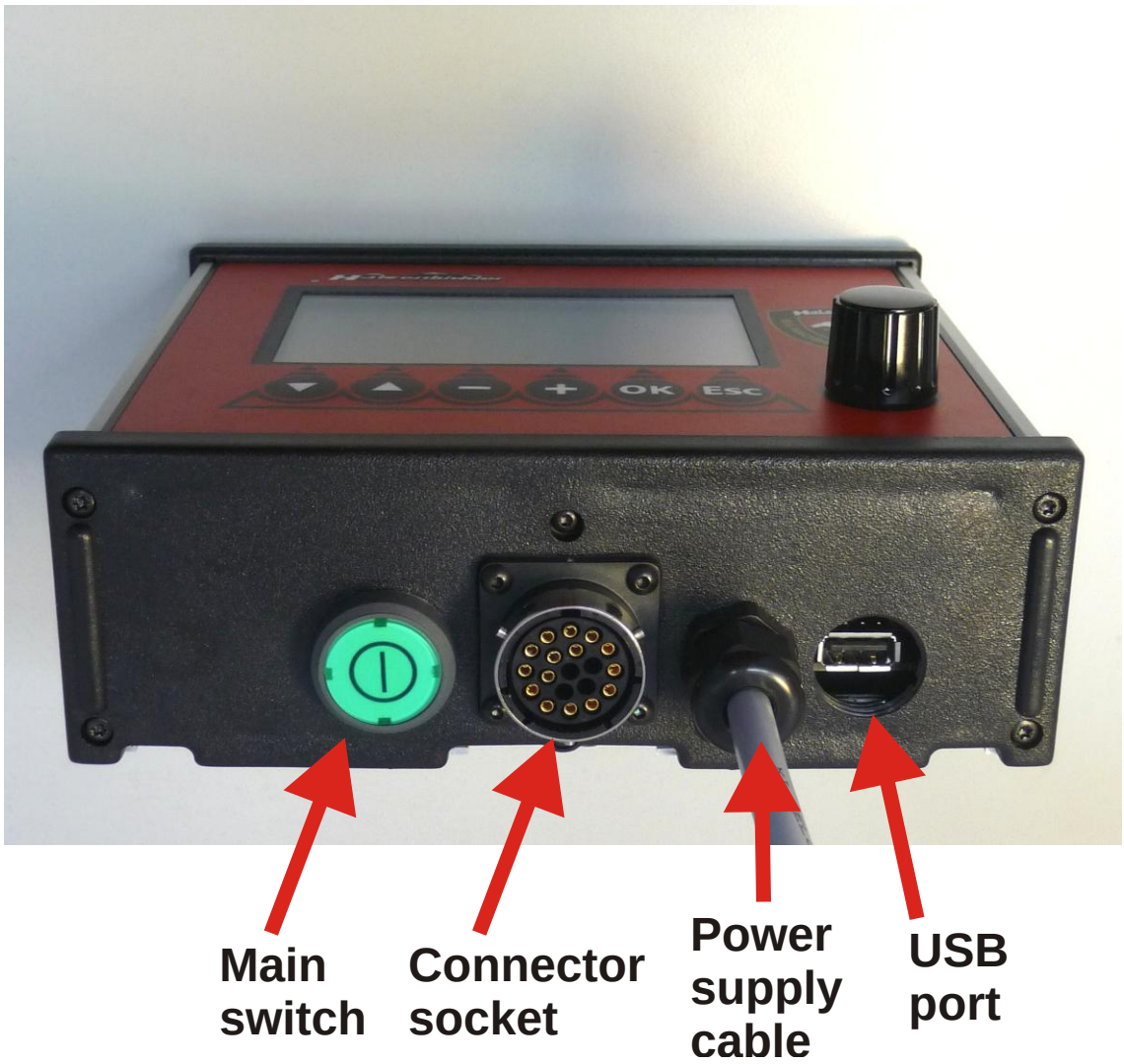

THOMAS HATZENBICHLER Agro-Technik GmbH
A-9433 St. Andrä, Fischering 2
Tel: ++43 (0)4358 / 2287–0 / Fax:++43 (0)4358 / 2208
http://www.hatzenbichler.com
agrotechnik@hatzenbichler.com

Main Screen (Job screen)

The main screen shows all information about the job in progress. In the following this screen is called "Job screen".

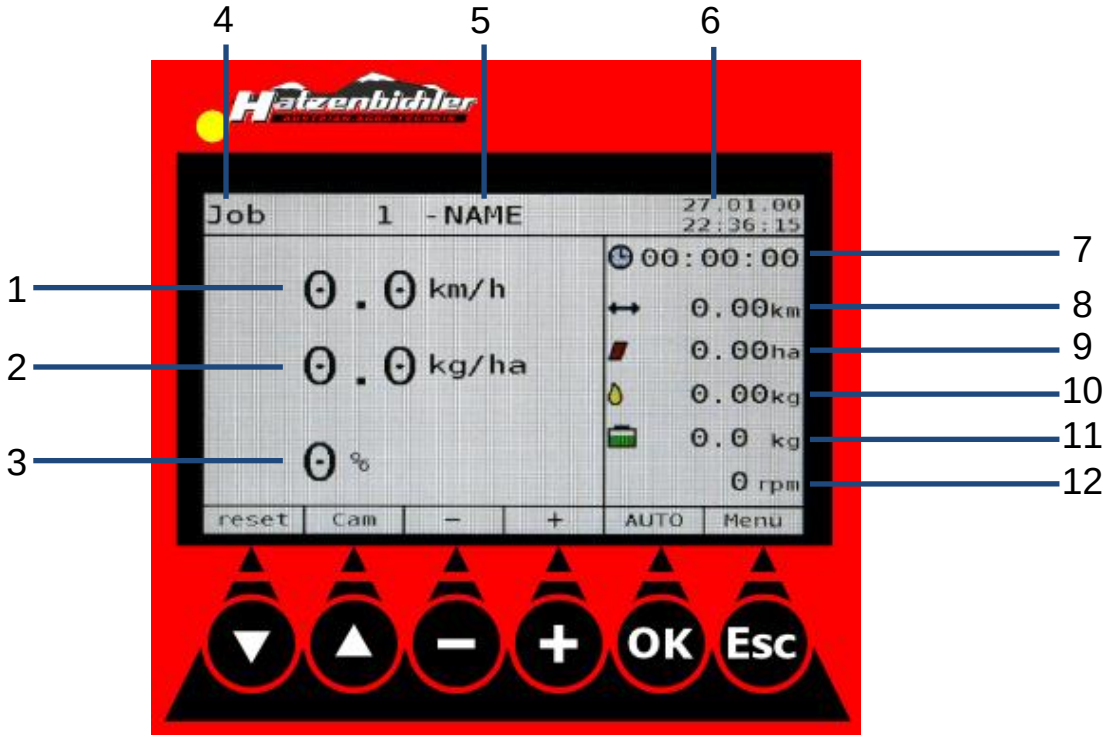

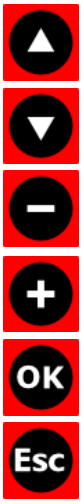

Camera

Reset for seed rate in %

Decrement value

Increment value

Second function for OK button

Second function to get into the menu

1	Travelling speed	7	Elapsed time
2	Actual seed rate in kg	8	Distance counter
3	Seed rate +% and -%	9	Hectare counter
4	Job	10	Used seed
5	Job number and name	11	Filling level
6	Date and time	12	Fan RPM

THOMAS HATZENBICHLER Agro-Technik GmbH
A-9433 St. Andrä, Fischering 2
Tel: ++43 (0)4358 / 2287–0 / Fax:++43 (0)4358 / 2208
http://www.hatzenbichler.com
agrotechnik@hatzenbichler.com

Important Settings

Before you start working, make the following settings:

1. Select **Language** (menu 4)

2. Check **Working width** (menu 1)

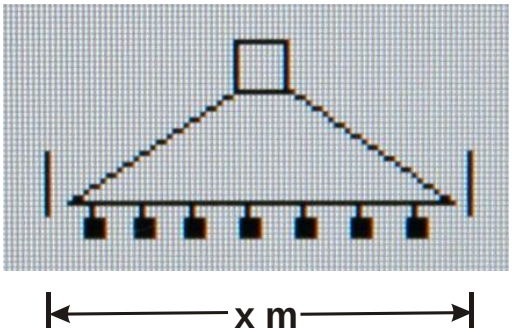

3. Check **Type of Sensor** (menu 4)

4. Check the pulse settings for wheel or radar sensor (menu 2)
   - Wheel: Dist. of pulses = 4.75
   - Radar: Dist. of pulses = 0.74

THOMAS HATZENBICHLER Agro-Technik GmbH
A-9433 St. Andrä, Fischering 2
Tel: ++43 (0)4358 / 2287–0 / Fax:++43 (0)4358 / 2208
http://www.hatzenbichler.com
agrotechnik@hatzenbichler.com

Getting Started

From calibration to seeding

Once the computer is energized by pressing the main switch at the bottom of the device and the boot loader has completed its routines, the start screen appears on the display.
After 5 seconds the Job screen is displayed.
Before you start, get familiar with the controls and the information on page 6.
Please note that two functions have been assigned to the keys "OK" and "Esc":

- "OK" + "AUTO"
- "Esc" + "Menu"

- Press "Esc" to enter into the Main menu
- Use the arrow keys ▲ and ▼ to navigate through the menu
- Select "Input"
- Press "OK"

Fig. 1

- Select "Working width"
- Press "OK"

Fig. 2

- Enter the working width by pressing "+" or "-" or by turning the DigiPot.
- Press "OK"

Fig. 3

THOMAS HATZENBICHLER Agro-Technik GmbH
A-9433 St. Andrä, Fischering 2
Tel: ++43 (0)4358 / 2287–0 / Fax:++43 (0)4358 / 2208
http://www.hatzenbichler.com
agrotechnik@hatzenbichler.com

- Use the arrow keys ▲ and ▼ to navigate to "Job"
- Press "OK"

Fig. 4

- Press "+" or "-" to select the job number (1 … 30)
- Press the arrow key ▼ to navigate to "Name". Here you can enter a descriptive name for the selected job.
- Press "OK"

Fig. 5

- Press "+" or "-" or use the DigiPot to navigate to the character/number you wish to enter. Confirm the selected letter by pressing "OK" or the DigiPot. Repeat this step until the name is complete.
- Press "Esc" to set the type of metering roller.

Fig. 6

- Press "+" or "-" to select the metering roller (coarse, fine, micro) installed in the seed box. This entry is for your information only and has no effect on the internal calculations made by the computer.
- Press "OK" to confirm your selection.

Fig. 7

THOMAS HATZENBICHLER Agro-Technik GmbH
A-9433 St. Andrä, Fischering 2
Tel: ++43 (0)4358 / 2287–0 / Fax:++43 (0)4358 / 2208
http://www.hatzenbichler.com
agrotechnik@hatzenbichler.com

- Enter the number of revolutions for the calibration process. This value should range between 10 … 50 revolutions (depending on the type of seed).
- Remove the cover of the seed box
- Check the brush. The brush should slightly touch the metering roller. If this is not the case, adjust the lever.
- Check the metering roller (black / red / green).
- Install the calibration tray.
- Fill some seed (3 - 5 kg) into the tank.
- Select "Start" and press "OK".

Fig. 8

Fig. 9

The electric motor starts turning the metering roller and the seed trickles into the calibration tray. When this process is completed, remove the calibration tray and determine the weight of the seed in the tray.

- "Stop" is highlighted. When the above mentioned activities are completed the computer automatically switches to the screen where you can input the determined weight.
- Press "+" or "-" or turn the DigiPot to enter the weight resulting from calibration.

Fig. 10

- Press "OK" to go to "Input – Seed rate".
- Enter the seed rate by pressing "+" or "-" or by turning the DigiPot.

Fig. 11

THOMAS HATZENBICHLER Agro-Technik GmbH
A-9433 St. Andrä, Fischering 2
Tel: ++43 (0)4358 / 2287–0 / Fax:++43 (0)4358 / 2208
http://www.hatzenbichler.com
agrotechnik@hatzenbichler.com

- On the next screen information about seed rate, minimum and maximum driving speed is displayed.
- Press "OK" or "Esc" to return to the Job screen.

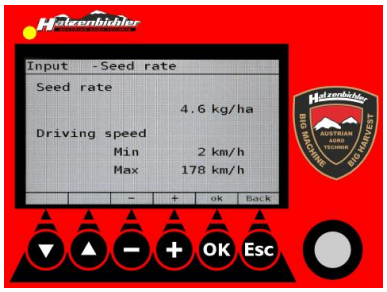

Fig. 12

- Press "OK" to enable the seeding process.

Fig. 13

A small seeder icon appears on the screen indicating that the machine is ready for seeding. During seeding the cover of the seeder must be hermetically sealed.

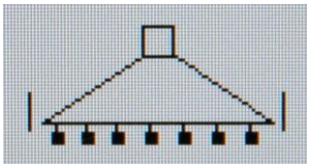

1 Input

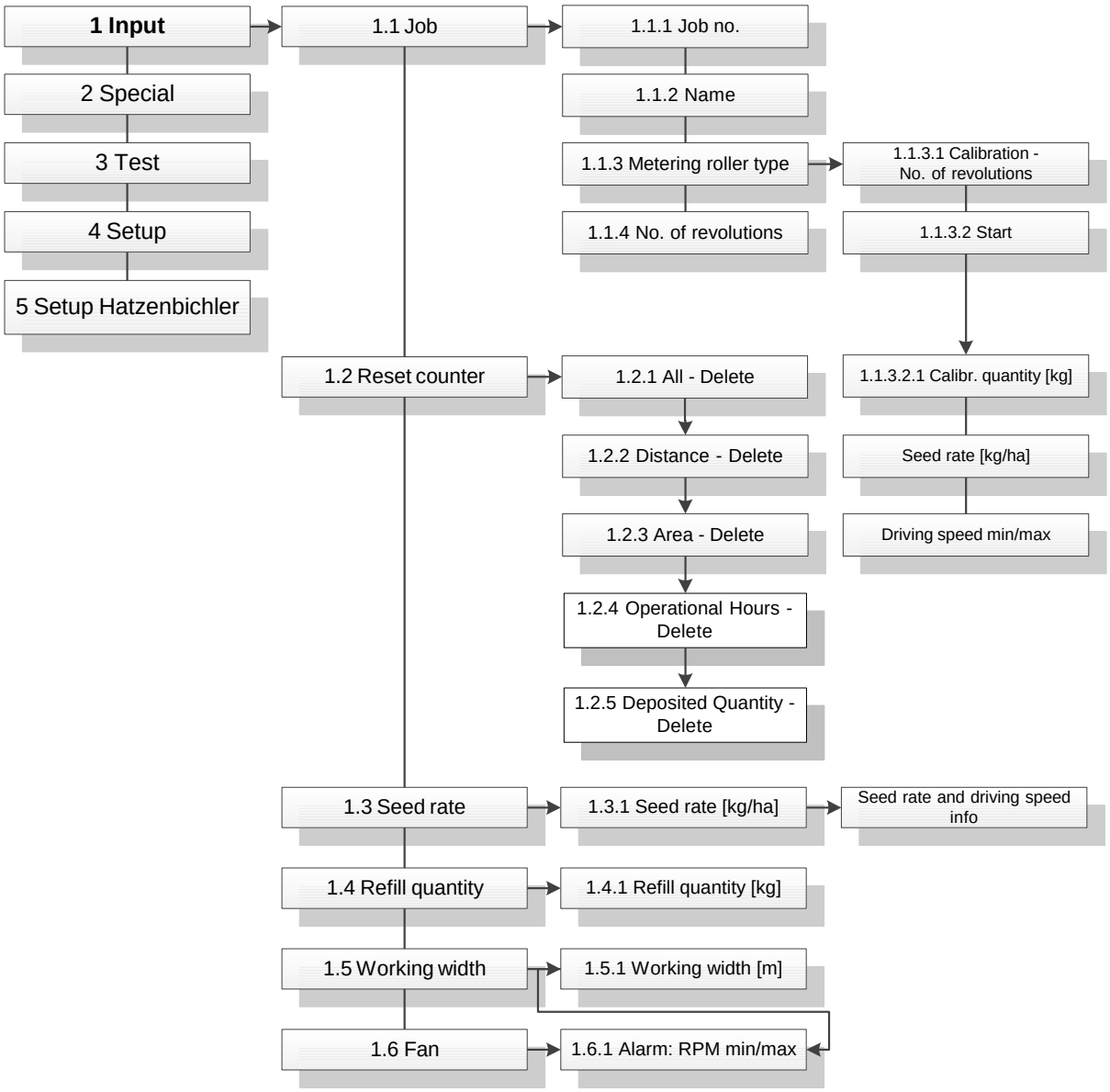
1 Input
2 Special
3 Test
4 Setup
5 Setup Hatzenbichler
1.1 Job
1.1.1 Job no.
1.1.2 Name
1.1.3 Metering roller type
1.1.3.1 Calibration - No. of revolutions
1.1.3.2 Start
1.1.3.2.1 Calibr. quantity [kg]
Seed rate [kg/ha]
Driving speed min/max
1.1.4 No. of revolutions
1.2 Reset counter
1.2.1 All - Delete
1.2.2 Distance - Delete
1.2.3 Area - Delete
1.2.4 Operational Hours - Delete
1.2.5 Deposited Quantity - Delete
1.3 Seed rate
1.3.1 Seed rate [kg/ha]
Seed rate and driving speed info
1.4 Refill quantity
1.4.1 Refill quantity [kg]
1.5 Working width
1.5.1 Working width [m]
1.6 Fan
1.6.1 Alarm: RPM min/max

THOMAS HATZENBICHLER Agro-Technik GmbH
A-9433 St. Andrä, Fischering 2
Tel: ++43 (0)4358 / 2287–0 / Fax:++43 (0)4358 / 2208
http://www.hatzenbichler.com
agrotechnik@hatzenbichler.com

1.1 Selecting a Job and Calibrating the Seed Box

When you have entered all important settings described on page 8 you can select a job and start calibration. You can choose from up to 30 different jobs. Jobs can be used to distinguish between different types of seed, calibration parameters, metering rollers and seed rates (kg/ha).

The Hatzenbichler seeder comes with two standard metering rollers (coarse and fine). For applications where these two roller types are not suitable, a superfine roller (micro) and a segmented roller with holes are available.

Coarse Fine Micro Segmented with holes

Fig. 14

- On the starting screen press "Esc" to activate the Main Menu.

Fig. 15

- Press "OK" to select "Input".

Fig. 16

THOMAS HATZENBICHLER Agro-Technik GmbH
A-9433 St. Andrä, Fischering 2
Tel: ++43 (0)4358 / 2287–0 / Fax:++43 (0)4358 / 2208
http://www.hatzenbichler.com
agrotechnik@hatzenbichler.com

- Press "OK" to select "Job".

Fig. 17

- Enter the job number (1 … 30) by pressing the key "+" or "-".
- Press the key ▼ (Name) to enter a job name.
- Select the characters to be entered by pressing "+" or "-" or by turning the DigiPot. Press the DigiPot or "OK" to enter the selected character. Repeat these steps until you have entered all characters. Then, press "Esc" to enter the type of metering roller.

Fig. 18

- Press "+" or "-" to select the metering roller type installed in the seed box.
- Press "OK" to confirm your selection and to go to "Calibration".

Fig. 19

- Enter the number of revolutions by pressing "+" or "-" or by turning the DigiPot. Press "OK" to confirm your selection.
  Please make sure that the number of revolutions is not too high and corresponds to the type of seed. For example, for rape seed 30 … 50 revolutions are adequate. Seed with coarse grains requires less revolutions (15 … 25).

Fig. 20

THOMAS HATZENBICHLER Agro-Technik GmbH
A-9433 St. Andrä, Fischering 2
Tel: ++43 (0)4358 / 2287–0 / Fax:++43 (0)4358 / 2208
http://www.hatzenbichler.com
agrotechnik@hatzenbichler.com

Make sure that there is enough seed in the tank for calibration purposes. However, the filling level should not exceed the quantity needed for calibration in case you must exchange the metering roller.

- Install the calibration tray.
- Press "OK" to start calibration.
- Wait until the metering roller has completed the number of revolutions you have set before.

Fig. 21

- Determine the weight of the seed in the calibration tray.
- Enter the weight [kg] determined before by pressing "+" or "-".
- Press "OK".

Fig. 22

- Press "+" or "-" to set the seed rate.
- Press "OK"

Fig. 23

Note on "Driving Speed" information:
If you don't get information about minimum or maximum driving speed, an error must have occurred. In this case, change the metering roller settings in menu 1.1 accordingly. Then, go to "Input/Job" and press the key ▲ (Calib.). This will trigger a new calibration process.

- Press "OK" to confirm the settings.
- Press "Esc" to return to the Job screen.

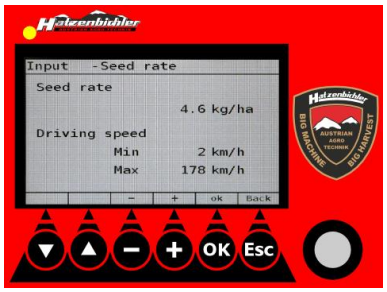

Fig. 24

THOMAS HATZENBICHLER Agro-Technik GmbH
A-9433 St. Andrä, Fischering 2
Tel: ++43 (0)4358 / 2287–0 / Fax:++43 (0)4358 / 2208
http://www.hatzenbichler.com
agrotechnik@hatzenbichler.com

1.2 Resetting Counter Values

Menu item 1.2 "Reset counter" is for deleting individual or all counter values of the active job.

- Starting from the Job screen, press "Esc" to go to "Main menu/Input". Then, press "OK".
- Press ▼ to select "Reset counter". Press "OK".

Fig. 25

- Press ▲ or ▼ to select the desired function.
- Press "OK" to execute this function.
- Once the function has been executed, the computer returns "Deleted".
- Press "Esc" three times to return to the Job screen.

Fig. 26

1.3 Setting the Seed Rate

Menu item 1.3 "Seed rate" is for setting the seed rate value of the active job.

- Starting from the Job screen, press "Esc" to go to "Main menu/Input". Then, press "OK".
- Press ▼ twice to select "Seed rate".

Fig. 27

- Press "+" or "-" or turn the DigiPot to enter the seed rate [kg/ha].
- Press "OK" to confirm.
  On the next screen, minimum and maximum driving speed values are displayed for your information.
- Press "OK" to return to the Job screen.

Fig. 28

THOMAS HATZENBICHLER Agro-Technik GmbH
A-9433 St. Andrä, Fischering 2
Tel: ++43 (0)4358 / 2287–0 / Fax:++43 (0)4358 / 2208
http://www.hatzenbichler.com
agrotechnik@hatzenbichler.com

1.4 Setting the Refill Quantity

Menu item 1.4 "Refill quantity" is for setting the quantity that has been filled into the tank. Based on this information, the computer is able to calculate the remaining quantity.

- Starting from the Job screen, press "Esc" to go to "Main menu/Input". Then, press "OK".
- Press ▼ three times to select "Refill quantity".
- Press "OK".

Fig. 29

- Press "+" or "-" or turn the DigiPot to enter the refill quantity [kg].
- Press "OK" to confirm and to return to the menu.
- Press "Esc" twice to return to the Job screen.

Fig. 30

1.5 Setting the Working Width

Menu item 1.5 "Working width" is for setting the width of the machine on which your seed box is installed.

- Starting from the Job screen, press "Esc" to go to "Main menu/Input". Then, press "OK".
- Press ▼ four times to select "Working width".
- Press "OK".

Fig. 31

THOMAS HATZENBICHLER Agro-Technik GmbH
A-9433 St. Andrä, Fischering 2
Tel: ++43 (0)4358 / 2287–0 / Fax:++43 (0)4358 / 2208
http://www.hatzenbichler.com
agrotechnik@hatzenbichler.com

- Press "+" or "-" or turn the DigiPot to enter the working width [m].
- Press "OK" to confirm and to return to the menu.
- Press "Esc" twice to return to the Job screen.

Fig. 32

1.6 Setting the Limits for Fan RPM Alarm

Menu item 1.6 "Fan" is for setting the minimum and maximum RPM values of the fan. If the fan of your seeder is equipped with an RPM sensor, you can set here the thresholds for RPM alarm.

- Starting from the Job screen, press "Esc" to go to "Main menu/Input". Then, press "OK".
- Press ▲ to select "Fan".
- Press "OK".

Fig. 33

- Press "+" or "-" or turn the DigiPot to enter the minimum RPM threshold. Press "OK".
- Press "+" or "-" or turn the DigiPot to enter the maximum RPM threshold.
- Press "Esc" three times to return to the Job screen.

Fig. 34

THOMAS HATZENBICHLER Agro-Technik GmbH
A-9433 St. Andrä, Fischering 2
Tel: ++43 (0)4358 / 2287–0 / Fax:++43 (0)4358 / 2208
http://www.hatzenbichler.com
agrotechnik@hatzenbichler.com

2 Special

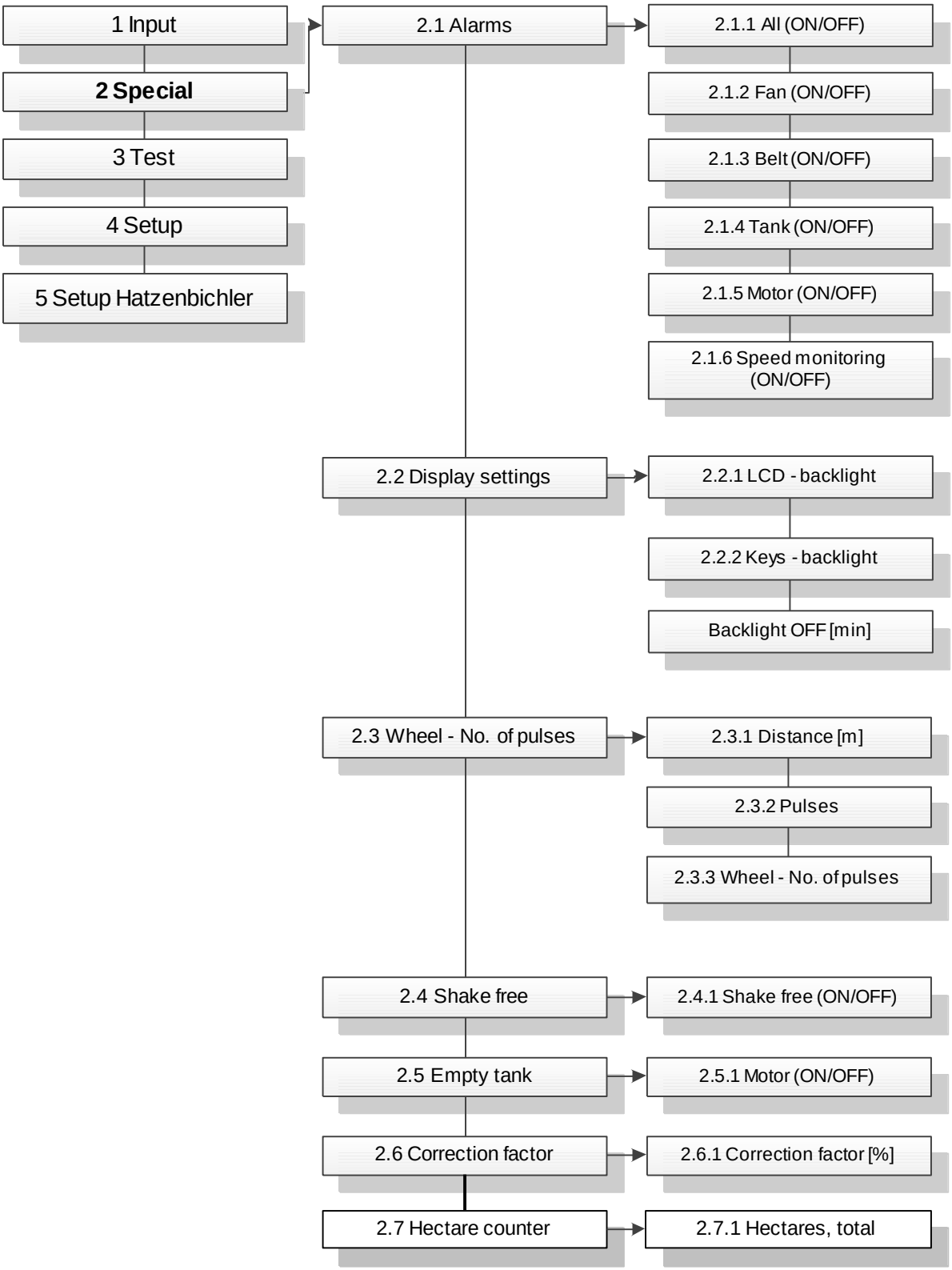

THOMAS HATZENBICHLER Agro-Technik GmbH
A-9433 St. Andrä, Fischering 2
Tel: ++43 (0)4358 / 2287–0 / Fax:++43 (0)4358 / 2208
http://www.hatzenbichler.com
agrotechnik@hatzenbichler.com

2.1 Alarms

Menu item 2.1 "Alarms" is for enabling or disabling acoustic (buzzer) and visual (display) alarms for components/functions of the seeder, such as fan, belt, tank, motor, speed monitoring.
You can enable/disable acoustic and visual alarms as a whole or for each component/function individually. In case you need a visual alarm only, you can disable the buzzer separately. If you disable an alarm, the buzzer is disabled automatically.

- Starting from the Job menu press "Esc" to go to the Main menu.

Fig. 35

- Press ▼ to select "Special", then press "OK" twice to go to "Alarms".

Fig. 36

- Press ▲ or ▼ to select the alarm you wish to enable or disable.
- Press "+" or "-" to toggle between ON and OFF.
- Press "Esc" to return to the menu.

Fig. 37

2.2 Display Settings

Menu item 2.2 "Display settings" allows you to customize the backlight settings of the monitor screen and the keys. You can also set the timer to switch the backlight automatically off.

THOMAS HATZENBICHLER Agro-Technik GmbH
A-9433 St. Andrä, Fischering 2
Tel: ++43 (0)4358 / 2287–0 / Fax:++43 (0)4358 / 2208
http://www.hatzenbichler.com
agrotechnik@hatzenbichler.com

- Navigate to menu item "Display settings".
- Press "OK" to enter the menu and customize the backlight settings.

Fig. 38

- Press ▲ or ▼ to select the setting you wish to change.
- Press "+" or "-" change the corresponding value. You can keep the keys pressed to keep increasing/decreasing the value.
- Press "Esc" to go back.

Fig. 39

2.3 Wheel - Pulses per Revolution

Menu item 2.3 "Wheel – no. of pulses" is for calibrating the sensor wheel. Here you can enter how many pulses you get when you travel a distance of 100 m. The factory setting is 4.75. You only have to change this setting if you don't use the original sensor wheel by Hatzenbichler.
Preparatory work: Mark a distance of exactly 100 meters.

- Navigate to menu item "Wheel – no. of pulses".
- Press "OK" to enter into the menu.

Fig. 40

- Press "OK" to start the calibration.

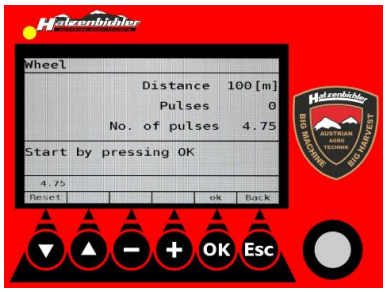

Fig. 41

THOMAS HATZENBICHLER Agro-Technik GmbH
A-9433 St. Andrä, Fischering 2
Tel: ++43 (0)4358 / 2287–0 / Fax:++43 (0)4358 / 2208
http://www.hatzenbichler.com
agrotechnik@hatzenbichler.com

- Travel the distance of 100 m.

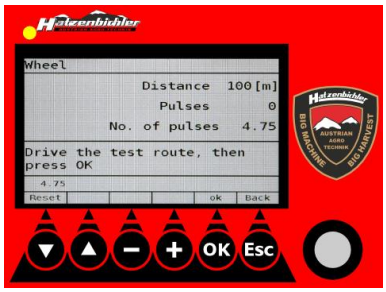

Fig. 42

- Press "OK" to confirm the new value.
- If you don't want to save the new value, press (Reset) and start again or press "Esc" to go back to the Job screen..

Fig. 43

2.4 Shake Free Mode

Menu item 2.4 "Shake free" is for releasing the metering roller in case it has stalled. If this function is activated, the motor rotates for a short time in clockwise and counter-clockwise direction to remove the object blocking the roller.

- Navigate to menu item "Shake free".
- Press "OK" to enter into the menu.

Fig. 44

- Press "OK" to activate this function.
- Once the object has been removed, press "OK" to stop this function.
- Press "Esc" to exit this menu item.

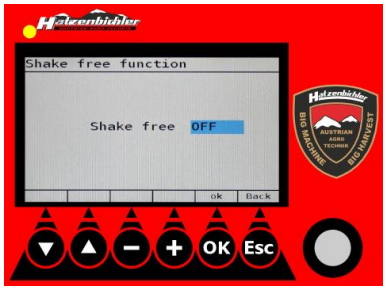

Fig. 45

THOMAS HATZENBICHLER Agro-Technik GmbH
A-9433 St. Andrä, Fischering 2
Tel: ++43 (0)4358 / 2287–0 / Fax:++43 (0)4358 / 2208
http://www.hatzenbichler.com
agrotechnik@hatzenbichler.com

2.5 Emptying the Hopper

Menu item 2.5 "Empty tank" is for discharging the hopper, for example if you wish to clean it.

- Navigate to menu item "Empty tank".
- Press "OK" to enter into the menu.

Fig. 46

- The "OK" key toggles between motor OFF and ON.
- Press "OK" to activate this function
- Once the tank is empty, press "OK" to switch the motor off.
- "Esc" to exit this menu item.

Fig. 47

2.6 Correction Factor

Menu item 2.6 "Correction factor" is for entering a correction factor to the seed rate. This factor must be calculated by the user considering various factors, such as grain size of the seed. The value showing the actually deposited quantity is not affected by the correction factor.

- Navigate to menu item "Correction factor".
- Press "OK" to enter into the menu.

Fig. 48

- Press "OK" to enter into the menu.
- Enter the correction factor in % by pressing "+" or "-" or by turning the DigiPot.
- Press "OK" to confirm the value entered.
- Press "Esc" to exit this menu item.

Fig. 49

THOMAS HATZENBICHLER Agro-Technik GmbH
A-9433 St. Andrä, Fischering 2
Tel: ++43 (0)4358 / 2287–0 / Fax:++43 (0)4358 / 2208
http://www.hatzenbichler.com
agrotechnik@hatzenbichler.com

2.7 Hectare Counter

Menu item 2.7 "Hectare counter" displays the total amount of area cultivated (in hectares).

- Navigate to menu item "Hectare counter".
- Press "OK" to enter into the menu.

Fig. 50

- The total area cultivated in hectares is displayed.

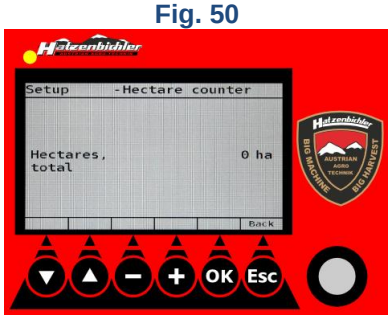

Fig. 51

- To reset this value press the keys ▼, "-" and "OK" simultaneously.

THOMAS HATZENBICHLER Agro-Technik GmbH
A-9433 St. Andrä, Fischering 2
Tel: ++43 (0)4358 / 2287–0 / Fax:++43 (0)4358 / 2208
http://www.hatzenbichler.com
agrotechnik@hatzenbichler.com

3 Test

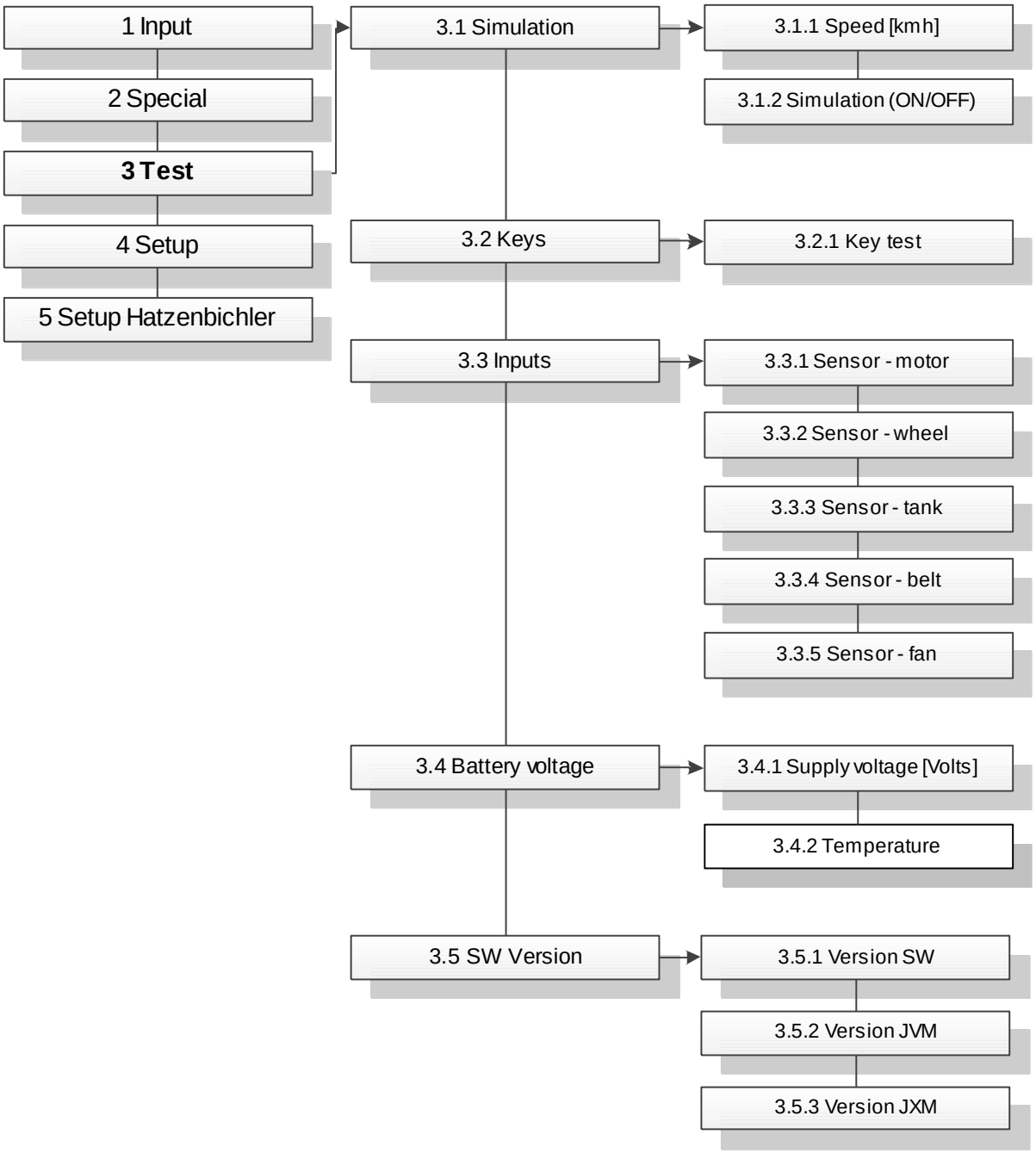

THOMAS HATZENBICHLER Agro-Technik GmbH
A-9433 St. Andrä, Fischering 2
Tel: ++43 (0)4358 / 2287–0 / Fax:++43 (0)4358 / 2208
http://www.hatzenbichler.com
agrotechnik@hatzenbichler.com

3.1 Simulation

Menu item 3.1 "Simulation" is for carrying out tests. Motor and metering roller are operated independently of the machine. To be able to use this feature complete the following steps first:

- Set the working width
- Create a job
- Calibrate the seeder

- Navigate to menu item "Simulation".
- Press "OK" to enter into the menu.

Fig. 52

- Set speed by pressing "+" or "-" or by turning the DigiPot.
- Press "OK" to toggle between simulation "OFF" and "ON".
- Press "Esc" to return to the Job screen

Fig. 53

- On the Job screen "TEST" is displayed to indicate that the test mode has been activated.
- Press "OK" [AUTO] to start the simulation.
- To stop the simulation navigate back to menu item "Simulation" and press "OK".
- Press "Esc" to return to the Job screen.

Fig. 54

3.2 Keys

Menu item 3.2 "Keys" allows you to check the keys for proper functioning.

THOMAS HATZENBICHLER Agro-Technik GmbH
A-9433 St. Andrä, Fischering 2
Tel: ++43 (0)4358 / 2287–0 / Fax:++43 (0)4358 / 2208
http://www.hatzenbichler.com
agrotechnik@hatzenbichler.com

- Navigate to menu item "Keys".
- Press "OK" to enter into the menu.

Fig. 55

- On the screen "Test – Keys" the state of the six keys is displayed.
- Press any key to test it for proper functioning.
- As long as you press the key, "Pressed" is displayed and a beep comes from the loudspeaker.
- Press "Esc" to exit this menu item.

Fig. 56

3.3 Input

Menu item 3.3 "Inputs" allows you to check the sensors for proper functioning.

- Navigate to menu item "Inputs".
- Press "OK" to enter into the menu.

Fig. 57

- The screen "Test – Inputs" shows the state of the different sensor inputs.
  The sensors are by default negative switching, i.e. "0" means "active". If no sensor is installed, "1" is displayed (or vice versa if the sensor is + switching).
  You can check the sensor for proper functioning if you turn the wheel, cover up the filling level sensor or turn the metering roller.
- Press "Esc" to exit this menu item.

Fig. 58

3.4 Battery voltage

Menu item 3.4 "Battery voltage" allows you to check the supply voltage coming from the tractor.

The battery voltage should be between 10 … 15 volts. If the voltage is below 10 V DC, check the tractor battery. This menu item lets you also check the device temperature.

- Navigate to menu item "Battery voltage".
- Press "OK" to enter into the menu.

Fig. 59

- Check the supply voltage and the device temperature.
- Press "Esc" three times to return to the Job screen.

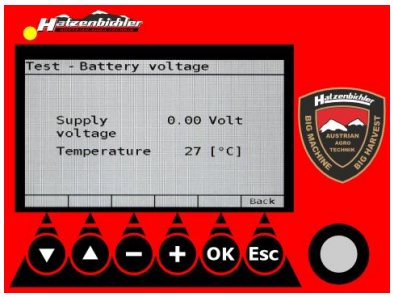

Fig. 60

3.5 Software Versions

Menu item 3.5 "SW version" shows the version numbers of the installed operating system and application software. You will need this information if you intend to update the software.

- Navigate to menu item "SW version".
- Press "OK" to enter into the menu.

Fig. 61

- Press "Esc" to exit this menu item.

Fig. 62

THOMAS HATZENBICHLER Agro-Technik GmbH
A-9433 St. Andrä, Fischering 2
Tel: ++43 (0)4358 / 2287–0 / Fax:++43 (0)4358 / 2208
http://www.hatzenbichler.com
agrotechnik@hatzenbichler.com

4 Setup

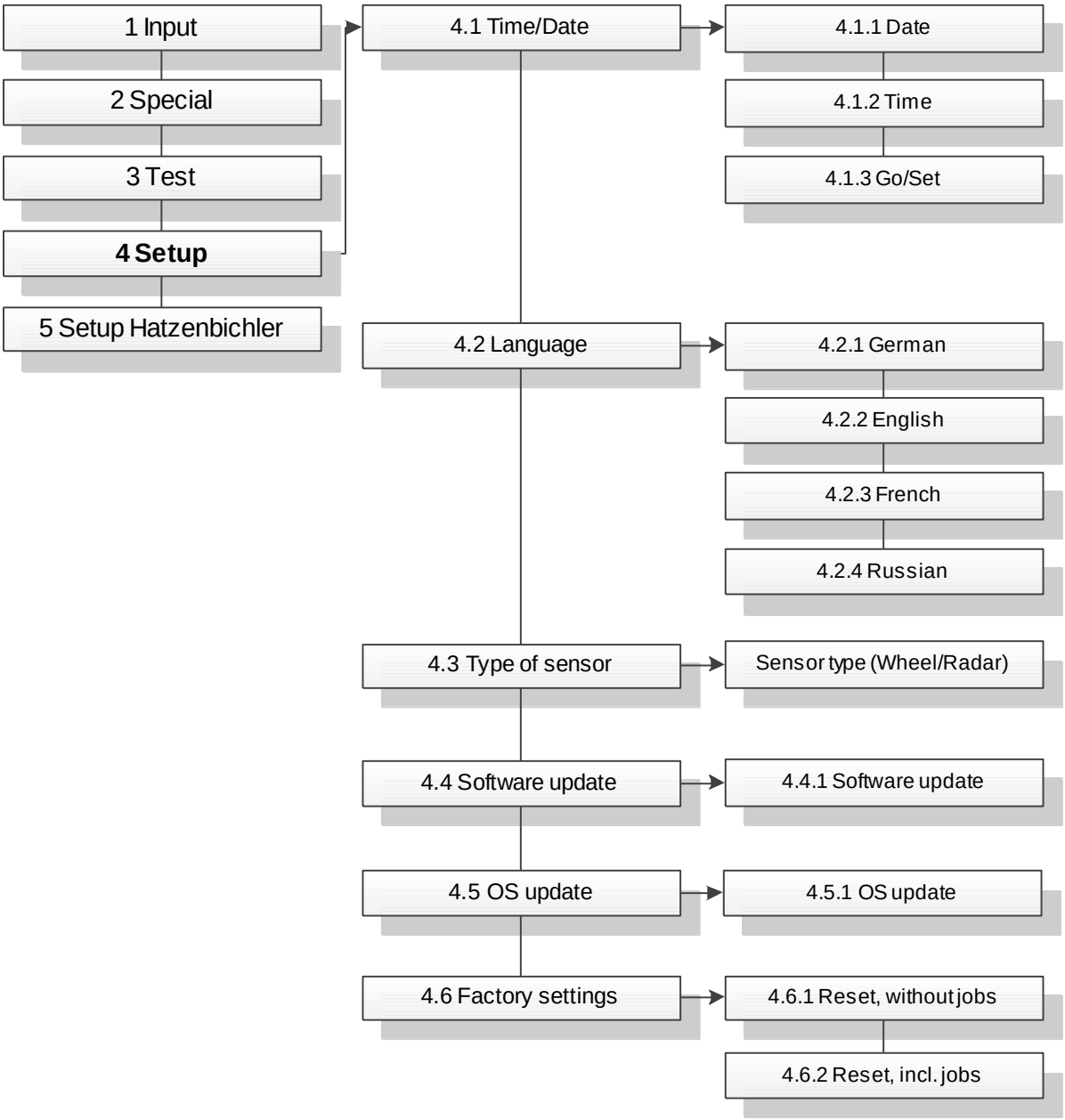

THOMAS HATZENBICHLER Agro-Technik GmbH
A-9433 St. Andrä, Fischering 2
Tel: ++43 (0)4358 / 2287–0 / Fax:++43 (0)4358 / 2208
http://www.hatzenbichler.com
agrotechnik@hatzenbichler.com

4.1 Time/Date

Menu item 4.1 "Time/Date" is for setting the time and date. The date format is "DD.MM.YY".

- Navigate to menu item "Time/Date".
- Press "OK" to enter into the menu.

Fig. 63

- To set the time and date press "+" or "-" to switch from "Go" to "Set".

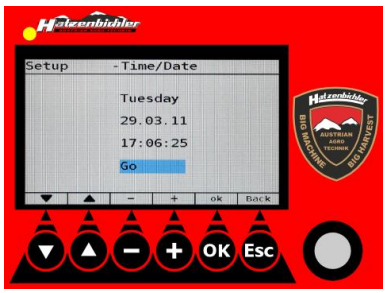

Fig. 64

- Press "OK".

Fig. 65

- Press "+" or "-" or turn the DigiPot to change the highlighted value.
- Press "OK" to confirm and jump to the next value.
  You can also navigate through the values by pressing the arrow keys ▲ or ▼.

Fig. 66

- Make all necessary adjustments and go to the field "Set".
- Press "+" or "-" to switch the value to "Go".
- Press "Esc" to exit this menu item.

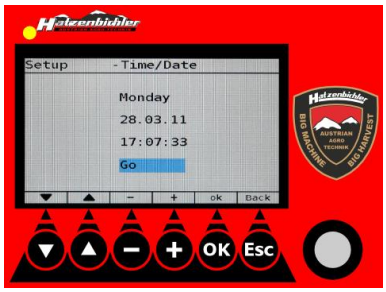

Fig. 67

4.2 Language

Menu item 4.2 "Language" is for selecting the language of the user interface.
The user may select one of the following languages:

- German
- Englisch
- French
- Russian

- Navigate to menu item "Language".
- Press "OK" to enter into the menu.

Fig. 68

- Press ▲ or ▼ to select the language.
- Press "OK" to confirm your selection.

Fig. 69

4.3 Type of Sensor

Menu item 4.3 "Type of sensor" lets you select the type of sensor used on the seed box, i.e. radar sensor or wheel-driven sensor.

- Navigate to menu item "Type of sensor".
- Press "OK" to enter into the menu.

Fig. 70

- Press "+" or "-" to select the sensor type.
- Press "OK" to confirm your selection and to exit this menu item.

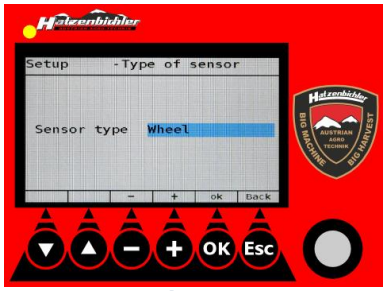

Fig. 71

4.4 Software Update

Menu item 4.4 "Software update" lets you update the application software of your computer.

- Navigate to menu item "Software update".
- Press "OK" to enter into this menu item.

Fig. 72

- Plug a USB stick into the USB port at the bottom of the on-board computer.

Fig. 73

THOMAS HATZENBICHLER Agro-Technik GmbH
A-9433 St. Andrä, Fischering 2
Tel: ++43 (0)4358 / 2287–0 / Fax:++43 (0)4358 / 2208
http://www.hatzenbichler.com
agrotechnik@hatzenbichler.com

- Follow the instructions on the screen.

Key assignment: ▼ = F1; "-" = F3.

Note:
Make sure that the USB stick is plugged in until the following message appears "Update successful, reboot system".

Make sure that during update process the power supply is not interrupted.

Fig. 74

4.5 OS Update

Menu item 4.5 "OS update" lets you update the operating system of your computer.

- Plug in the USB stick with the new OS.
- Navigate to menu item "OS update".
- Press "OK" to enter into this menu item.

Fig. 75

- The message "Ready" appears on the screen.
- Press "OK" to start OS download.
- The bar on the screen shows the progress of the download. Under it the progress is shown in percent format.
- When the message "Ready" appears on the screen, the update process has finished.
- Check the new version under 3.5. "SW version".

Fig. 76

Note:
Make sure that the USB stick is plugged in until the following message appears "Update successful, reboot system".

Make sure that during update process the power supply is not interrupted.

THOMAS HATZENBICHLER Agro-Technik GmbH
A-9433 St. Andrä, Fischering 2
Tel: ++43 (0)4358 / 2287–0 / Fax:++43 (0)4358 / 2208
http://www.hatzenbichler.com
agrotechnik@hatzenbichler.com

4.6 Factory Settings

Menu item 4.6 "Factory settings" lets you reset your computer to its as-delivered settings. You may choose between two options:

- Full reset including all job settings
- Reset without deleting the job settings

- Navigate to menu item "Factory settings".
- Press "OK" to enter into this menu item.

Fig. 77

- Press ▼ to select an option.
- Press "OK" to confirm your selection and to exit this menu and return to the Job screen.

Fig. 78

5 Setup Hatzenbichler

This menu is for service purposes only and is not accessible to the user.