OPICO LIMITED
Cherry Holt Road, Bourne, Lincs, PE10 9La
Tel: 01778 421111 Fax: 01778 425080
email: ask@opico.co.uk
website: http://www.opico.co.uk

Operating Instruction

Pneumatic seed box
L type Controller

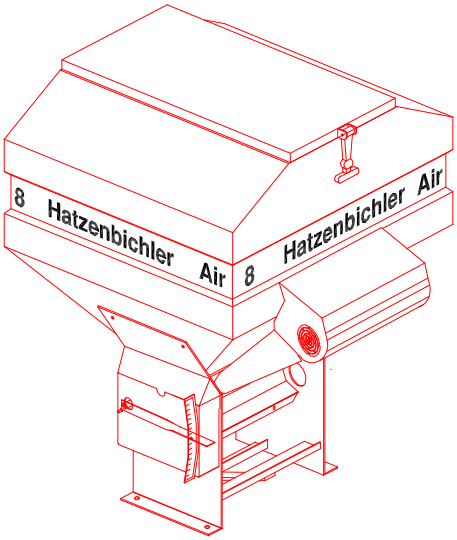

Quality from OPICO
Profit from our knowledge
2008

OPICO LIMITED
Cherry Holt Road, Bourne, Lincs, PE10 9La
Tel: 01778 421111 Fax: 01778 425080
email: ask@opico.co.uk
website: http://www.opico.co.uk

Electronic Control Box – Operators Guide

This section of the Operators Manual deals with the Electronic Control Box which is fitted to Air 8 Electronic and Variocast 8 E machines and all Variocast 16 and Air 16 machines.

The Electronic Control box allows operators to set the seeder up for the job it is doing, calibrate it and then operate it. It provides the operator with a variety of different pieces of information about the seeder whilst it is working and will retain these until the operator chooses to delete them.

Information such as the current seed rate being applied and current forward speed is displayed on the screen whilst in work. The control box can also be set to keep a log of the area covered, distance covered, and time taken as well as monitoring the seed level and the amount of seed used.

There are also a number of warning functions that help keep the operator informed of any potential problems.

- Low hopper level
- No drive from the electronic motor
- No drive to the metering roller
- The forward speed is too low
- The forward speed is too high

The instructions for using the control box that are set out below enable a new operator to maximise the performance of his/her machine, please read through them carefully and take some time to work through them whilst using the control box.

OPICO LIMITED
Cherry Holt Road, Bourne, Lincs, PE10 9La
Tel: 01778 421111 Fax: 01778 425080
email: ask@opico.co.uk
website: http://www.opico.co.uk

Contents

OPICO LIMITED
Cherry Holt Road, Bourne, Lincs, PE10 9La
Tel: 01778 421111 Fax: 01778 425080
email: ask@opico.co.uk
website: http://www.opico.co.uk

SECTION A

UNDERSTANDING THE CONTROL BOX

A1 THE BUTTONS ON THE CONTROL BOX

What each button does

The F1key lets you enter your desired application rate of seed, in KG per hectare.

The F2 key takes you into CALIBRATION MODE.

The F3 key is used to access background menus.

The F4 key allows you to scroll around the operator information displayed next door to it - HECTARES WORKED, METRES WORKED, HOURS WORKED.

The F5 key allows you to scroll around the operator information displayed next door to it - BATTERY VOLTAGE, TANK CONTENT, QUANTITY OF SEED SPREAD.

The F6 key is used to access background menus.

The UP and DOWN arrows let you alter your application rate on the move, and are also used to scroll up and down menus and enter values.

The across arrow lets you start and stop the hours worked counter and is also used to move the curser across one decimal place when entering values.

The OK button stores any value or alteration made to the control box.

The ESCAPE button will always return you to the WORKING SCREEN (shown above).

The AUTO button starts and stops seeding

OPICO LIMITED
Cherry Holt Road, Bourne, Lincs, PE10 9La
Tel: 01778 421111 Fax: 01778 425080
email: ask@opico.co.uk
website: http://www.opico.co.uk

A2 THE DISPLAY


This displays the actual Seed rate in KG per HECTARE, when seeding. When the Seed rate has been temporarily increased or decreased "on the move" this figure will alternate between the actual seed rate and the % it has been changed by.


This displays Forward Speed Km/H


This displays set spread width – NB each symbol represents a different standard width setting.

This indicates which field or job data read-out is selected. There is the possibility to store HECTARES WORKED, METRES TRAVELED, HOURS WORKED and QUANTITY SPREAD for 19 different fields or jobs.

Use the F4 key to toggle between Metres Worked, Hectares Worked and Hours Worked.


This displays "meters worked" – without seeding.


This displays Hours Worked.


This displays Hectares Worked - seeding.

Use the F5 Key to toggle between battery voltage, content of seed in the tank and quantity of seed used.


This displays weight of seed in the tank in kilograms.


This displays Battery Voltage.


This displays weight of seed metered out in kilograms.

(This feature is not used on Air 8 or Variocast 8 machines with electric fans.)
On machines with hydraulic fans the fan rpm is displayed here

OPICO LIMITED
Cherry Holt Road, Bourne, Lincs, PE10 9La
Tel: 01778 421111 Fax: 01778 425080
email: ask@opico.co.uk
website: http://www.opico.co.uk

SECTION B

USING THE CONTROL BOX – CALIBRATION AND SETTING

B1 ENTERING DESIRED SEED RATE

To enter desired seed rate (KG/Hectare) :

- PRESS AND HOLD F1 FOR 2 SECONDS

This screen will appear

- ALTER THE FLASHING DIGIT BY PRESSING
- MOVE TO THE NEXT DIGIT BY PRESSING
- USE THIS METHOD TO ATTAIN THE DESIRED KG/HECTARE
- STORE THE VALUE BY PRESSING Ok **(TIP: get the decimal point in the right place)**
- EXIT WORKING SCREEN BY PRESSING Esc

<u>The desired seed rate is now stored in the control box. However, on returning to the working screen the previously entered value will not be displayed. It is only displayed when the seeder is working and a forward speed is being achieved.</u>

The method in which you have entered the seed rate is commonly used through out the control box. Remember ....

- When a digit is flashing it can be altered
- Ok Always stores the entered value
- Esc Always brings you back to the working screen

OPICO LIMITED
Cherry Holt Road, Bourne, Lincs, PE10 9La
Tel: 01778 421111 Fax: 01778 425080
email: ask@opico.co.uk
website: http://www.opico.co.uk

B2. CALIBRATING THE SEEDER

OPERATION DEPENDENT SETTINGS!

Your seeder can be used to apply a large variety of seed types at different rates and hugely varying forward speeds. When you calibrate your seeder for the first time or change the operation it is being used for, it is advisable to check the calibration speed (rpm) of the seed roller. If the seed roller is rotating quickly in operation a more accurate calibration will be achieved if a similar rpm is used during calibration.

IMPORTANT – please see page 33 Section F (F2 – Code 82) Menu 150.0 for instructions on setting the meter roller speed for calibration

To calibrate the seeder with the type of seed being applied ...

- PRESS AND HOLD F2 FOR 2 SECONDS

This will take you into **MENU 1.0** which will look like this.

The value next to F4 is how many turns the seed roller will make during the calibration. To alter this figure press F4, the value will start to flash and can then be altered by using the up▲, down ▼ and ► ◄across arrows and set by pressing OK.

When using the coarse metering roller FOR GRASS SEEDS - 30 TURNS IS AMPLE
When using the fine metering roller FOR SMALL SEEDS - 70 TURNS IS ADVISED

The value next to F6 is the weight of seed entered after the previous calibration.

- AT THE BACK OF THE SEEDER – SET THE BRUSH SETTING FOR THE TYPE OF SEED BEING USED (SEE AIR 8/AIR 16 INSTRUCTION MANUAL), REMOVE THE METERING ROLLER COVER AND PLACE THE CALIBRATION TRAY IN THE SEEDER
- TO BEGIN CALIBRATION PRESS F5.

This will take you into **menu 1.1** which will look like this ...

The seed roller will begin to turn and meter seed into the calibration tray.

The display next to F6 will count the seed roller rotations as it turns.

When the set number of rotations has been achieved the seed roller will automatically stop.

- WEIGH THE SEED METERED OUT BY THE ROLLER – **It is important to use a good set of accurate digital scales, any errors will be compounded when working in the field**
- PRESS F5.

OPICO LIMITED
Cherry Holt Road, Bourne, Lincs, PE10 9La
Tel: 01778 421111 Fax: 01778 425080
email: ask@opico.co.uk
website: http://www.opico.co.uk

- ENTER THE SEED WEIGHT IN KILOGRAMS BY USING ▼ ▲

- STORE THE VALUE BY PRESSING Ok
- BOX AUTOMATICALLY RETURNS TO THE WORKING SCREEN, YOU CAN CHECK YOUR CAL WEIGHT BY GOING BACK TO MENU 1.0

THE CALIBRATION IS COMPLETE

When operating your seeder on a slow moving soil engaging implement such as a subsoiler and at a low forward speed, the seeder may reach it's minimum metering speed in tough soil conditions. If this happens an alarm will sound and a "tortoise" symbol will appear on the screen. The seeder can be set to stop seeding or to continue seeding at the lowest possible rate when this occurs. Please see Page 34, section F (F2 Code 182) Menu 152.0 to learn how to alter this.

B3. SETTING MACHINE WIDTH

To set a standard working width

- PRESS AND HOLD F2 FOR 2 SECONDS

- SCROLL DOWN TO **MENU 2.0** USING ▼ ▲

This screen will appear

Each of the symbols next to F3 represents a different standard working width.

To select the correct width of spread setting for your machine

- PRESS AND HOLD F3 FOR 1 SECOND

The symbols will start flashing and **menu 2.1** will appear

- PRESS ▼ ▲ TO SELECT DIFFERENT WORKING WIDTHS.
- PRESS Ok TO STORE CORRECT WORKING WIDTH.
- PRESS Esc TO RETURN TO WORKING SCREEN.

When the air seeder is being used as a Variocast for TILLSEEDING the working width required may not be included in the standard working width settings.

To attain the correct working width a background menu needs to be accessed.

This is clearly explained in **SECTION C2.**

OPICO LIMITED
Cherry Holt Road, Bourne, Lincs, PE10 9La
Tel: 01778 421111 Fax: 01778 425080
email: ask@opico.co.uk
website: http://www.opico.co.uk

B4. CALIBRATING FORWARD SPEED

This menu lets you calibrate actual forward speed by automatically timing the length in between each sensor pulse on the land wheel or radar if fitted

Landwheel - A standard setting of 4.75 is entered into the box. It is recommended to calibrate to gain the most accurate seeding when

- The land wheel is running into loose, cultivated land
- You notice that you are using too much or too little seed on a certain area

Radar - There is no standard setting for the radar so a calibration must be done before it is used for the first time.

To carry out the calibration:

- PRESS AND HOLD F2 FOR 2 SECONDS.
- SCROLL DOWN TO **MENU 3.0** USING ▼ ▲.

This screen will appear

- MEASURE A 100M RUN ON SOME SOIL OR GRASS SIMILAR TO THAT WHICH THE MACHINE WILL BE TRAVELING OVER WHEN SEEDING.
- PRESS F6 TO START CALIBRATION AND IMMEDIATELY START TO TRAVEL THE 100M RUN.

This screen will appear

NEXT TO F5 THE IMPULSES THAT ARE BEING COUNTED AT THE LAND-WHEEL WILL BE DISPLAYED.

- TRAVEL AT A SIMILAR SPEED TO THE SPEED AT WHICH YOU WILL BE DRIVING WHEN SEEDING
- WHEN 100M HAVE BEEN TRAVELED IMMEDIATELY PRESS F6 TO END CALIBRATION.

A new value will appear next to F5

- PRESS Ok TO STORE.
- PRESS Esc TO RETURN TO WORKING SCREEN.

If using the landwheel the value should not be more than 5.00 or less than 4.20

For the most accurate value carry out the calibration 3 times and then use the average value.

THE CALIBRATION IS COMPLETE

OPICO LIMITED
Cherry Holt Road, Bourne, Lincs, PE10 9La
Tel: 01778 421111 Fax: 01778 425080
email: ask@opico.co.uk
website: http://www.opico.co.uk

SECTION C

USING THE CONTROL BOX – SETTING THE JOB DATA

Information from19 different "jobs" can be held on the control box, these could apply to different fields on a farm or different customers for a contractor. The control box also stores information about the work done in its total lifetime under Job "0" (this cannot be altered or deleted)

C1 - Setting and altering the Job Number

The Job number 

can be seen in the top centre of the control box display, it can be altered by pressing and holding 

for 1 second, it will then start to flash, use the up▲and down▼arrows to scroll through the job numbers. Press the OK button to select the number desired, it will stop flashing and the control box will then record data under that number until it is changed again.

C2 - Resetting a complete job

All the records for a selected job can be Zero'd whilst it is flashing by pressing the 

button which has "DEL" next door to it on the display. (Ha, distance, Time and Seed used will all be set to "0") Press OK to accept after delete or press Esc to cancel.

To Reset each of the individual counters for a job first press and hold the 

button for 1 second, the job number will start to flash.

C3 - Resetting the Hectare counter

The Hectare counter 

for the job selected can be shown in the top right hand corner of the display by pressing F4 to scroll round until the symbol above is shown and flashing. To reset the ha figure to Zero press the 

button which has "DEL" next door to it on the display. Then press OK to accept or press Esc to cancel.

C4 - Resetting the Distance counter

The distance counter 

for the job selected can be shown in the top right hand corner of the display by pressing F4 to scroll round until the symbol above is shown and flashing.

To reset the figure to Zero press the 

button which has "DEL" next door to it on the display.
Then press OK to accept or press Esc to cancel

OPICO LIMITED
Cherry Holt Road, Bourne, Lincs, PE10 9La
Tel: 01778 421111 Fax: 01778 425080
email: ask@opico.co.uk
website: http://www.opico.co.uk

C5 - Setting the time counter

The clock  for the job selected can be shown in the top right hand corner of the display by pressing F4 to scroll round until the symbol above is shown and flashing.

To reset the time to zero press the 

button which has “DEL” next door to it on the display.
Then press OK to accept or press Esc to cancel

C6 - Setting the Seed used counter

The seed used  for the job selected can be shown in the middle right hand side of the display by pressing F4 to scroll round until the symbol above is shown and flashing.

To reset the weight to Zero press the 

button which has “DEL” next door to it on the display.
Then press OK to accept or press Esc to cancel

ALL JOB DATA HAS NOW BEEN RESET

C7 - Tank Filling

The amount of seed in the tank shown in the middle right hand side of the display,  can be altered by pressing and holding 

for 1 second.

Then Press 

which will have FILL next door to it on the display, this will refill the full tank capacity.
Press “OK” to accept or press “Esc” to cancel.

It is also possible to enter a specific amount of seed, press 

and the figure will flash, then use the up▲ and down▼ arrows to enter the correct amount and press “OK” to accept or “ESC” to cancel

OPICO LIMITED
Cherry Holt Road, Bourne, Lincs, PE10 9La
Tel: 01778 421111 Fax: 01778 425080
email: ask@opico.co.uk
website: http://www.opico.co.uk

SECTION D

D - Alarm Functions (See symbol diagram page 12)

There are both optical and acoustic alarms to warn the operator when –

- The Seed in the tank is below the sensor position.
- No impulse is coming from the Electric drive motor.
- No impulse is coming from the metering roller.
- The forward speed is too low (The metering roller cannot be turned slowly enough to attain the required seedrate at such a slow speed)
- The forward speed is too high (The metering roller cannot be turned quickly enough to attain the required seedrate at such a fast forward)
- The fan is not running (possible disconnection – Menu No. 140.0)

D1 - Descriptions Of The Alarm Functions

LOW HOPPER LEVEL ALARM

On the display both the symbols for the tank and the number of kg in the tank flash and the acoustic alarm emits a beep every second for the first 20 seconds, after that emits 2 beeps with an interval of 1 second every 20 seconds.

The following alarms are activated only when seeding is in operation.

THE ELECTRIC MOTOR IS NOT WORKING
The symbols "?" and “Metering sensor” will flash on the display and the acoustic alarm will sound 3 beeps per second constantly.

THE METERING ROLLER IS NOT TURNING
The symbols "?" and “Metering sensor” will flash on the display and the acoustic alarm will sound 2 beeps per second constantly.

THE FORWARD SPEED IS TOO SLOW
The symbols "?" and "Tortoise" will flash on the display and the acoustic alarm will sound 3 beeps per second constantly – **refer to note in B2.**

THE FORWARD SPEED IS TOO HIGH
The symbols "?" and "Hare" will flash on the display and the acoustic alarm will sound 2 beeps per second constantly.

FAN SPEED ALARM – (IF ACTIVATED)
The symbols "Shaft" and "RPM" will flash on the display and the acoustic alarm will sound 3 beeps per second constantly.

OPICO LIMITED
Cherry Holt Road, Bourne, Lincs, PE10 9La
Tel: 01778 421111 Fax: 01778 425080
email: ask@opico.co.uk
website: http://www.opico.co.uk

Seeder Electronic Control Box Display Symbols

Printer	GPS	Menu Menu adjustment	<I/O>
Drive too fast	Mod.	Drive too slow	% Seed rate correction increase/decrease
Working width		Metering roller + agitator sensor	Sown quantity per ha
Land wheel sensor	Seeder on		
? Fault	P1	Forward speed	Auto
Man	Test	Min	Imp Counting pulse
Max	Distance - mtr	Work time - hr	Area sown - ha
Tank content - kg + sensor	Battery amps	Sown quantity - kg	
	Rpm Fan speed		

OPICO LIMITED
Cherry Holt Road, Bourne, Lincs, PE10 9La
Tel: 01778 421111 Fax: 01778 425080
email: ask@opico.co.uk
website: http://www.opico.co.uk

SECTION E

E - ACCESSING BACKGROUND MENUS - THE USER MENU

E1 Altering the number of standard working widths – 10.0

To access the user background menu:

PRESS Ok AND F2 TOGETHER FOR 2 SECONDS.

Menu 10.0 will appear which will look like this

This menu lets you alter the number of pre-set standard working widths.
If you are keeping the seeder on the same machine at all times, you only need one working width.


This display indicates how many standard working widths are stored in the box 1-9

To alter the number of pre-set standard working widths:

- PRESS F4 UNTILL THE DISPLAY STARTS TO FLASH
- USE ▼ ▲ TO ALTER NUMBER OF PRE-SET STANDARD WORKING WIDTHS TO DESIRED AMOUNT.
- PRESS Ok TO STORE.
- PRESS Esc TO RETURN TO WORKING SCREEN.

OPICO LIMITED
Cherry Holt Road, Bourne, Lincs, PE10 9La
Tel: 01778 421111 Fax: 01778 425080
email: ask@opico.co.uk
website: http://www.opico.co.uk

E2. - HOW TO ALTER A PRE-SET STANDARD WORKING WIDTH - 11.0

If your desired working width is not one of the preset working widths then you need to manually change one of the pre-sets.

To alter pre-set standard working width to desired working width

- PRESS Ok AND F2 TOGETHER FOR 2 SECONDS.
- SCROLL DOWN TO **MENU 11.0** USING ▼ ▲.

Menu 11.0 looks like this - This is an example of changing pre-set 2.5m working width to 3.0m working width

The value shown next to F5 is the working width in metres. The value in the square box is the pre-set number N1.

To alter the pre-set working width (N1):

- PRESS F5 UNTILL THE VALUE STARTS FLASHING
- ALTER THE VALUE TO YOUR DESIRED WORKING WIDTH USING ▼ ▲
- PRESS Ok TO STORE.
- PRESS Esc TO RETURN TO WORKING SCREEN.

PLEASE NOTE

Now you have altered the pre-set working width you need to select it in MENU 2.0 (See below and section B3)

To do this:

- STARTING AT THE NORMAL WORKING SCREEN PRESS AND HOLD F2 FOR 2 SECONDS
- SCROLL DOWN TO **MENU 2.0** USING ▼ ▲.

- PRESS F3 UNTILL THE SYMBOL STARTS FLASHING
- USE ▼ ▲ TO FIND YOUR ALTERED WOKING WIDTH
- PRESS Ok TO STORE.
- PRESS Esc TO RETURN TO WORKING SCREEN.

YOUR WORKING WIDTH IS NOW SET

OPICO LIMITED
Cherry Holt Road, Bourne, Lincs, PE10 9La
Tel: 01778 421111 Fax: 01778 425080
email: ask@opico.co.uk
website: http://www.opico.co.uk

E3 - HOW TO ALTER THE CAPACITY OF THE TANK – 20.0

To alter the pre-set Tank Capacity

- PRESS Ok AND F2 TOGETHER FOR 2 SECONDS.
- SCROLL DOWN TO **MENU 20.0** USING ▼ ▲.

Menu 20.0 looks like this

The value shown next to F5 is the Tank Capacity in Kg's.

To alter the pre-set Tank Capacity

- PRESS F5 UNTIL THE VALUE STARTS FLASHING
- ALTER THE VALUE TO YOUR DESIRED CAPACITY USING ▼ ▲
- PRESS Ok TO STORE.
- PRESS Esc TO RETURN TO WORKING SCREEN.

OPICO LIMITED
Cherry Holt Road, Bourne, Lincs, PE10 9La
Tel: 01778 421111 Fax: 01778 425080
email: ask@opico.co.uk
website: http://www.opico.co.uk

E4 . HOW TO ALTER THE RELATIONSHIP BETWEEN THE MOTOR AND METERING ROLLER – 30.0

To alter the pre-set Number of impulses

- PRESS Ok AND F2 TOGETHER FOR 2 SECONDS.
- SCROLL DOWN TO **MENU 30.0** USING .

Menu 30.0 looks like this

The value shown next to F5 is the number of impulses. **Standard Setting is 750 - DO NOT ALTER THIS SETTING.**

To alter the pre-set Number of Impulses

- PRESS F5 UNTIL THE VALUE STARTS FLASHING
- ALTER THE VALUE TO YOUR DESIRED CAPACITY USING
- PRESS Ok TO STORE.
- PRESS Esc TO RETURN TO WORKING SCREEN.

OPICO LIMITED
Cherry Holt Road, Bourne, Lincs, PE10 9La
Tel: 01778 421111 Fax: 01778 425080
email: ask@opico.co.uk
website: http://www.opico.co.uk

SECTION F

SERVICE FUNCTIONS

To access further special functions press keys “F3, OK AND F6” all at the same time for 2 seconds

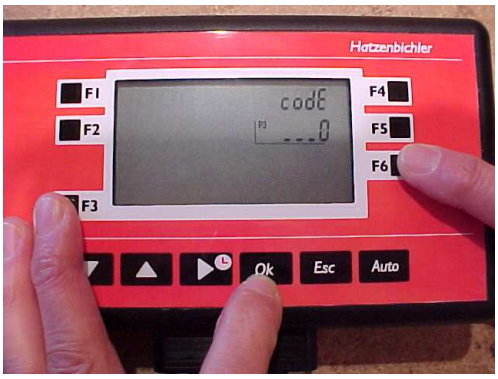

The screen below will appear and a code needs to be entered to access the different functions.

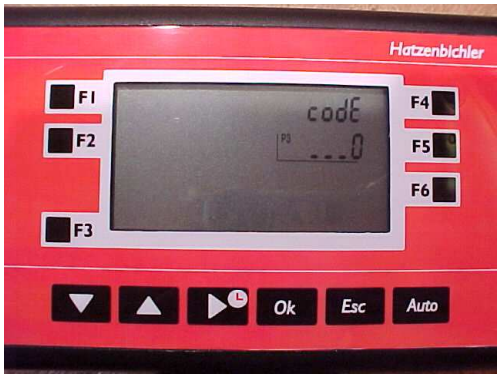

The Codes below can then be used to access the different menu’s –

F1) CODE 50 – How to alter the lighting on the display – 191.0

Key F4 – (Factory Setting - 0) Light Sensor not fitted
Key F5 – (Factory Setting - 10) Display lighting activation – not in use
Key F6 – (Factory Setting - Yes) Lighting in the display – Yes / No

OPICO LIMITED
Cherry Holt Road, Bourne, Lincs, PE10 9La
Tel: 01778 421111 Fax: 01778 425080
email: ask@opico.co.uk
website: http://www.opico.co.uk

F2) CODE 82 – Settings for the Motor and Metering Roller –

Scroll around the Menus using the up and down arrows -

Menu No. 150.0: (Factory Setting – 35), The setting will be displayed beside the F5 Key, it is the rotation speed of the metering roller during calibration (RPM).

For the most accurate calibration the speed of the seed roller in calibration should be as close to its speed in work. The working width and type of seed roller being used will obviously influence this rpm so there are some guide settings below.

a)	Grass seeding at 10 kph	-	35 rpm
b)	OSR seeding at 10 kph	-	25 rpm
c)	OSR seeding at 5 kph	-	15 rpm

Menu No. 151.0: (Factory Setting – 5), the setting will be displayed beside the F5 Key, it is the percentage change increment that seed rate is increased or decreased when the up and down arrows are used in seeding mode.

Menu No. 152.0: (Factory setting – No), the setting will be displayed beside the F5 Key – It determines what happens to the metering Roller when the forward speed is too low and the alarm is sounding. When driving too slowly the metering roller axle can be set to stop or drive at minimum speed.

No = Metering Roller stops.
Yes = Metering Roller drives at minimum speed – advisable in most circumstances with OSR

Menu No. 153.0: (Factory setting – 30), the setting will be displayed beside the F5 Key – It represents the minimum number of motor pulses the control box can receive per second. (Range = 10 to 99)

Menu No. 153.1: (Factory setting – 100), the setting will be displayed beside the F5 Key – It represents the maximum number of rotations per minute of the metering roller. (Range = 50 to 250)

Menu No. 153.2: (Factory setting – 5), the setting will be displayed beside the F5 Key – It represents the number of pulses taken for the average calculation of RPM. (Range = 2 to 10)

Menu No. 153.3 (Factory setting – 5), the setting will be displayed beside the F5 Key – It represents the regulation factor. (Range = 1 to 9)

Menu No. 154.0: (Factory setting – 5), the setting will be displayed beside the F5 Key – It represents the minimum number of boost pulses at the start. (Range = 0 to 250)

Menu No. 154.1: (Factory setting – 50), the setting will be displayed beside the F5 Key – It represents the minimum number of pulses after the start boost. (Range = 0 to 250)

Menu No. 154.2: (Factory setting – 50), the setting will be displayed beside the F5 Key – It represents the boost power %. (Range = 1 to 99)

Menu No. 154.3: (Factory setting – 10), the setting will be displayed beside the F5 Key – It represents time in 10ths of a second between the end of the boost and the start of normal metering. (Range = 1 to 50)

Menu No. 155.0: (Factory setting – 17000), the setting will be displayed beside the F5 Key – It represents the PWM frequency. (Range = 5000 to 20000)

OPICO LIMITED
Cherry Holt Road, Bourne, Lincs, PE10 9La
Tel: 01778 421111 Fax: 01778 425080
email: ask@opico.co.uk
website: http://www.opico.co.uk

F3) CODE 166 – Resetting all the Jobs to 0

This is used to reset all the job data including Job No. 0. - (Ha, Distance, Quantity spread, Start/stop time, Travel time and Work time).

Press OK once the code has been entered

F4) CODE 169 – Resetting all the Jobs to 0

This is used to reset all the job data but **without including Job No. 0**. - (Ha, Distance, Quantity spread, Start/stop time, Travel time and Work time).

Press OK once the code has been entered

F5) CODE 183 – Resetting the Control Box – Type 1

This is used to reset the Control Box to Standard Settings.

Press OK once the code has been entered

F6) CODE 321 – Switching the Fan Alarm on and off – 140.0

Key F5 - Yes / No – to switch the acoustic alarm for the fan on and off (only on hydraulic fan units – where sensor is fitted)

OPICO LIMITED
Cherry Holt Road, Bourne, Lincs, PE10 9La
Tel: 01778 421111 Fax: 01778 425080
email: ask@opico.co.uk
website: http://www.opico.co.uk

SECTION G

TEST FUNCTIONS

There is a test menu to enable the operator to simulate working the machine and check sensors and control box functions. To access this menu press keys “F3 and F4” at the same time for 2 seconds.

The screen below will appear once the buttons above have been pressed. Menu 190 is the test menu and the up and down arrows can be used to scroll around the different menu numbers.

G1 – Forward speed simulation – 190.0

When static a forward speed impulse can be simulated so that the seeder works as if driving along the field. This is useful when first learning to use the control box and as a check if there is a problem.

The screen above shows a preset forward speed of 6km/h and the **’no’** in the right hand corner shows that the forward speed test function is not working. Press F6 twice to select yes. Whilst the forward speed is flashing it is possible to alter the forward speed used in the simulation. Press OK to confirm and Esc to go back to the main working screen. The forward speed will now be displayed on the main screen with a flashing **“Test”** symbol to show that the control box is in Test mode. Operation of the Seeder can now be simulated by pressing the **Auto** mode.
To exit test mode reverse the process used to enter it.

Whilst in Test Mode and on the normal front screen it is possible to change the simulated forward speed by pressing the “ESC” Key and the up or down arrow at the same time.

OPICO LIMITED
Cherry Holt Road, Bourne, Lincs, PE10 9La
Tel: 01778 421111 Fax: 01778 425080
email: ask@opico.co.uk
website: http://www.opico.co.uk

G2 – Testing the Keys – 190.1

By entering the test menu and selecting Menu 190.1 the operation of the keys can be checked.

When a key is pressed the number of the key will appear in the top right hand corner of the display near the F4 button. The numbers around the picture below indicate the Number of each Key

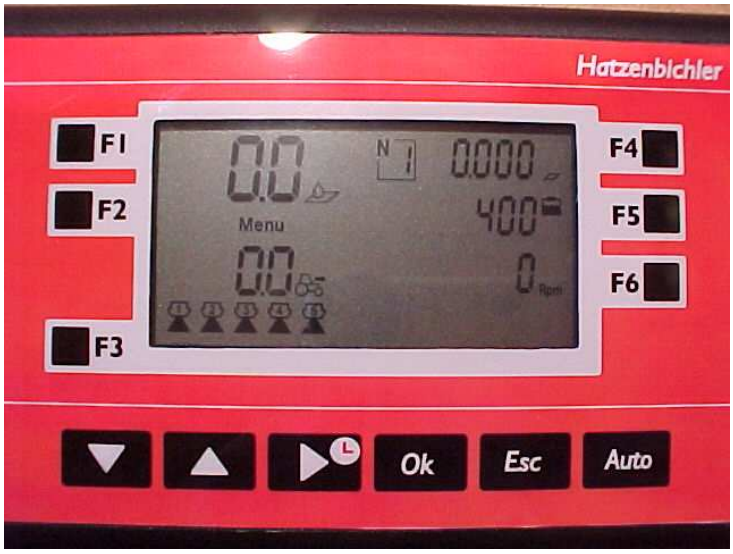

OPICO LIMITED
Cherry Holt Road, Bourne, Lincs, PE10 9La
Tel: 01778 421111 Fax: 01778 425080
email: ask@opico.co.uk
website: http://www.opico.co.uk

G3 – Testing the Sensors – 190.2

By entering the test menu and selecting Menu 190.2 the operation of the sensors can be checked.

Each sensor is represented on the display in the top right hand corner by a line. When the sensor is activated the line will appear and when it is deactivated the line will disappear.

The picture below shows the lines and what they represent.

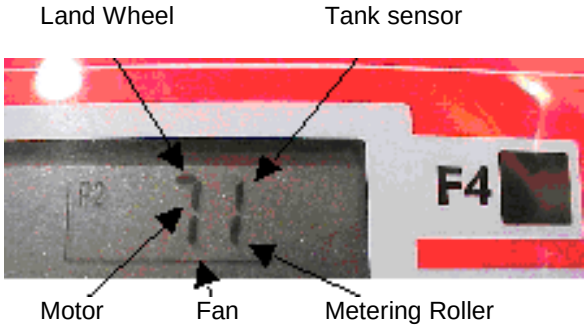

G4 – Testing the Battery Volts – 190.3

By entering the test menu and selecting menu 190.3 the volts being supplied to the control box can be seen.

OPICO LIMITED
Cherry Holt Road, Bourne, Lincs, PE10 9La
Tel: 01778 421111 Fax: 01778 425080
email: ask@opico.co.uk
website: http://www.opico.co.uk

G5 – Testing the Motor – 190.4

By entering the test menu and selecting Menu 190.4 you can check the number of impulses coming from the motor per rotation of the metering roller.

When the F6 key is pressed it activates the motor and the pulses will be counted in the top right hand corner next to the F4 button. The number of pulses per revolution should equal the number of pulses set in Menu 30.0 see section E

SECTION H – OPERATING THE SEEDER IN THE FIELD

OPICO LIMITED
Cherry Holt Road, Bourne, Lincs, PE10 9La
Tel: 01778 421111 Fax: 01778 425080
email: ask@opico.co.uk
website: http://www.opico.co.uk

Once the seeder has been calibrated and the correct settings for the machine it is mounted on entered in the control box you are ready to go seeding.

The Control Box should be set on the standard working screen, if it is not press the ESC button to return to this screen.

Remember to switch the hydraulic or electric fans on before you start seeding !!!!

Once the hopper is filled with seed and the fans are switched on you are ready to go seeding. Press the **Auto** button so that the drill symbol appears in the middle of the display. As soon as the machine is in work and the land wheel starts to turn the seeder will start to operate.

In operation the current seed rate will be displayed in the top left hand corner and the forward speed in Km/h will be displayed in the bottom left. The Area, Distance Travelled, Time Taken, and Seed Used will also begin to count up. At the same time the amount of seed left in the hopper will begin to count down

During operation the up and down arrows can be used to increase and decrease the seed rate being applied in 5% increments.

To stop the seeding operation press the Auto button once more, the drill symbol will disappear from the screen and the seeder will stop seeding.

I) Weights and Measures

The control box works in metric and the ranges below show the maximum and minimum figures used by the box.

Kg/Ha	Seed output	0.0	- 199.9 Kg/Ha
Km/h	Speed	0.0	- 99.9 Km/h
Distance	Distance without dosage	0.000	- 9999 Km
Ha	Surface (worked over)	0.000	- 9999 Hectares
Work time	Start/stop Time	0.00 h/min	- 9999 hours
Tank content	Quantity in tank	0.0	- 9999.9 Kg
Battery tension	Battery tension measured during control	0.0	- 30.0 volt
Kg spread	Quantity spread	0.0	- 9999.9 Kg
Rpm	Current number of revolutions per minute (fan)	0	- 9999 rpm

OPICO LIMITED
Cherry Holt Road, Bourne, Lincs, PE10 9La
Tel: 01778 421111 Fax: 01778 425080
email: ask@opico.co.uk
website: http://www.opico.co.uk

Air 8/16 Electronic Drive Wiring Diagram

Dokumenthåndbog	**Wiring Diagram**	Afsnit:	DH 82_03
		Side:	1 af 1
		Udgave:	v-01
Fil: ISO 9004-1	**Niveau 3**	Effektiv dato:	1998/03/10

Produkt: 012-3-0100	**Samlingsbox**
Tegning nr.: 1.	**Beskrivelse: Diagram til montering af kabel**
Tegning nr.: 2 - 4	**Beskrivelse: Montage**
Flow diagram nr.:	**Beskrivelse:**