MAGNA GRAIN DRYERS

MODELS – ELECTRIC DRIVE

Updated May 2011

1 INTRODUCTION TO THE MANUAL

1.1 FOREWORD

This manual is provided to give you the necessary operating and maintenance instructions to obtain the best performance and working life for your dryer.

Please read this manual thoroughly. Understand what each control is for and how to use it.

Observe all safety precautions decaled on the machine and noted throughout the manual for safe operation.

DO NOT CARRY OUT MAINTENANCE WORK AND/OR REPAIRS UNTIL THE MAIN POWER SWITCH TURNED TO OFF.

DO NOT UNDER ANY CIRCUMSTANCES ENTER THE DRYER THROUGH THE INSPECTION HATCH UNTIL THE MAIN POWER SWITCH TURNED TO OFF. FAILURE TO FOLLOW THIS INSTRUCTION MAY CAUSE SERIOUS INJURY. EXPLANATION – SHOULD THE AGITATOR ARM RECIRCULATE WHILST THE OPERATOR IS ENTERING THE DRYER OR INSIDE THE DRYER

If any assistance or additional information is needed, contact your authorized OPICO dealer.

This manual is divided into the following sections:

1) Introduction
2) General Information
3) Preparing The Dryer For Operation
4) Loading And Operation
5) Maintenance
6) Safety Warnings
7) Trouble Shooting
8) Storage
9) Wiring Diagrams

For safety and to obtain the performance of which these machines are capable we recommend that the operator should read this manual carefully before initial start up at the beginning of each season and when changing to a new crop type.

1.2 INDEX

1 INTRODUCTION TO THE MANUAL 2
1.1 FOREWORD 2
1.2 INDEX 3
1.3 DEFINITION OF SYMBOLS 4
1.4 SAFE WORKING ENVIRONMENT 4

2 GENERAL INFORMATION 5
2.1 OVERVIEW 5
2.2 DRYER IDENTIFICATION 5
2.3 DRYER COMPONENTS 6
2.4 THEORY OF DRYING 7
2.4.1 HEATING THE GRAIN 7
2.4.2 COOLING THE GRAIN 7
2.4.3 RECOMMENDED DRYING TEMPERATURES 8
2.4.4 TEMPERATURE CONVERSION CHART 12

3. PREPARING THE DRYER FOR OPERATION 13
3.1 SITING THE DRYER 13
3.2 ELECTRICAL CONNECTIONS 13
3.3 DIESEL FUEL SUPPLY 13
3.4 POSITIONING THE TOP FOLD DOWN AUGER 14
3.5 PREPARING FOR TRANSPORT 15
3.6 LOADING AUGER HOPPER 15
3.7 GRAIN CLEANER 16
3.8 DISCHARGE AUGER 16

4 LOADING AND OPERATION 18
4.1 CONTROL BOARD 18
4.2 PLENUM & GRAIN TEMPERATURE THERMOSTATS 20
4.3 PLENUM SAFETY CONTROL 20
4.4 THERMIC SAFETY 20
4.5 LOADING & OPERATION 21
4.6 HOW TO GET THE BEST PERFORMANCE OUT OF YOUR DRYER 22
4.7 BURNER 23

5 MAINTENANCE 28
5.1 POINTS TO LUBRICATE 28
5.2 OPERATION MAINTENANCE 29
5.3 ELECTRICAL MAINTENANCE 29

6 SAFETY WARNINGS 30
6.1 SAFETY PRINCIPLE 30
6.2 WARNINGS AND DANGERS 31
6.3 SAFETY GUARDS AND WARNING LOGOS 32
6.3.1 EMERGENCY STOP BUTTON 32
6.4 RESIDUAL RISKS 32
6.5 NOISE LEVELS 32

7 TROUBLE SHOOTING 33
7.1 THE BURNER 33
7.2 FUEL CIRCUIT 34

8 STORAGE 34

9 ELECTRIC WIRING DIAGRAMS 34

ENCLOSED WITH THIS HANDBOOK

- DECLARATION OF CONFORMITY SUPPLIED BY THE MANUFACTURER
- ELECTRIC WIRING DIAGRAM
- PRODUCT REGISTRATION CARD

1.3 DEFINITION OF SYMBOLS

Symbols are used in this handbook to highlight parts of its content, which are of special importance for safety, use and maintenance

SYMBOL	MEANING	DESCRIPTION
	ATTENTION	Section of text which includes an instruction that that requires attention
	DANGER	This symbol requires you to pay special attention because your safety is involved
	USE	Explanation of the correct use of the dryer
	MAINTENANCE	Maintenance Instructions

1.4 SAFE WORKING ENVIRONMENT

Read and understand the operators manual before operating the unit

Always disconnect the PTO shaft or if an electric drive unit turn the main power switch to off before adjusting, lubricating, servicing or cleaning

Keep all shields and safety devices in place

Keep children, visitors and untrained personnel away from the machine while in operation

Keep hands, feet and clothing away from moving parts

Keep unit level when operating

DO NOT UNDER ANY CIRCUMSTANCES ENTER THE DRYER THROUGH THE INSPECTION HATCH UNTIL THE MAIN POWER SWITCH TURNED TO OFF. FAILURE TO FOLLOW THIS INSTRUCTION MAY CAUSE SERIOUS INJURY. EXPLANATION – SHOULD THE AGITATOR ARM RECIRCULATE WHILST THE OPERATOR IS ENTERING THE DRYER OR INSIDE THE DRYER

2 GENERAL INFORMATION

2.1 OVERVIEW

All instructions relating to position are as viewed from the front of the dryer looking toward the back of the machine.

2.2 DRYER IDENTIFICATION

The Identification Plate and CE marking of the machine is placed on the left side of the draw-bar.

The identification plate must not be tampered with, covered over or modified in any way.

Should the plate become damaged or lost you should request a replacement as soon as reasonable possible.

Picture 2.2 **IDENTIFICATION PLATE**

2.3 DRYER COMPONENTS

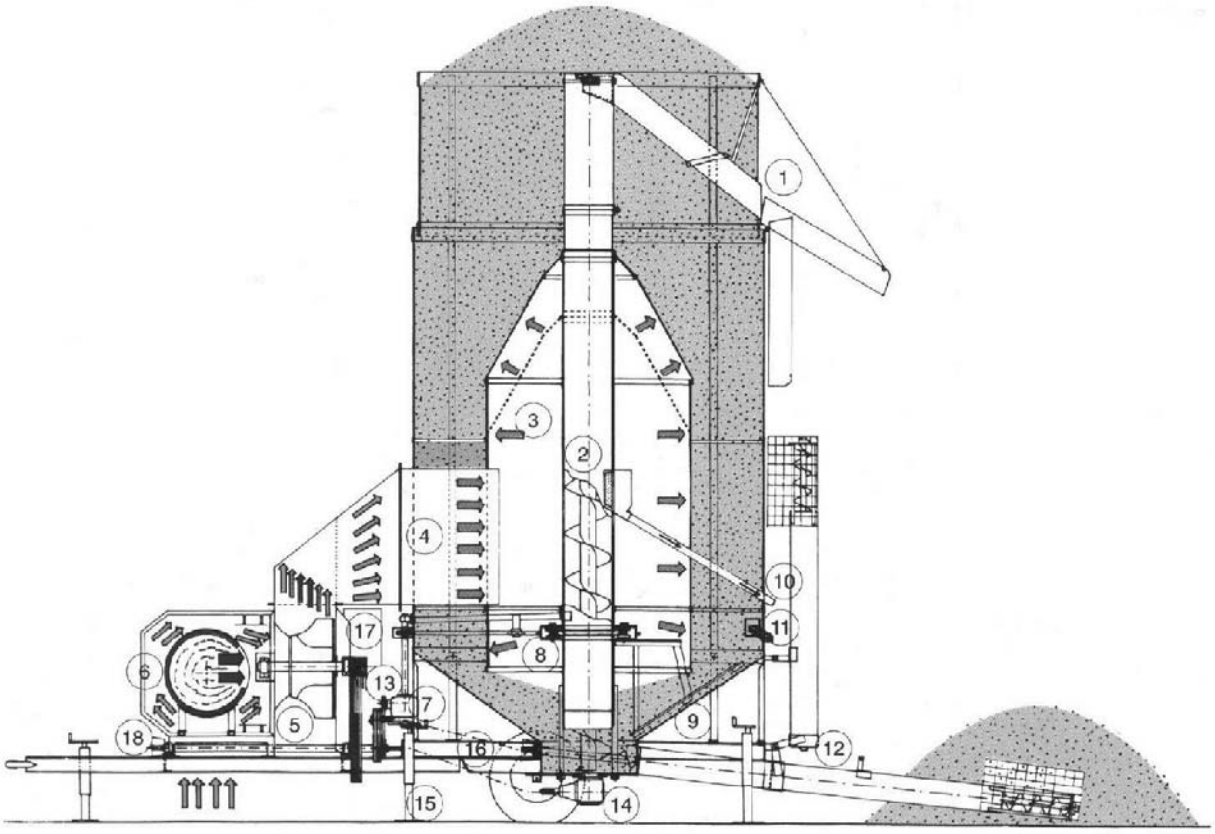

Picture 2.3 **DRYER COMPONENTS TABLE**

1) Discharge Chute
2) Vertical Auger
3) Plenum Chamber
4) Air Duct
5) Fan
6) Heat Unit
7) Agitator Gearbox
8) Agitator support rollers
9) Agitator Arm
10) Grain Cleaner Discharge
11) Grain Sampler outlet
12) Loading Auger
13) Belt Drive
14) Centre Auger Drive
15) Adjustable Support Jacks
16) Intake drive
17) Control Board

2.4 THEORY OF DRYING

2.4.1 HEATING THE GRAIN

Combinable crop drying has two basic stages:

1. The diffusing of internal moisture to the surface of the grain, bean or seed.

   Followed by:

2. The removal of the created external moisture by air flow.

The grain temperature largely establishes this rate of diffusion and must be controlled not to exceed a rate that could result in a ruptured seed.

Removal of the exterior moisture is dependant upon air flow and air temperature.

These two stages must be balanced to produce the quality dried crop.

The balance is accomplished quite simply in the Magna Grain Dryer with its uniform circulation, regulated heat and controlled air-flow.

2.4.2 COOLING THE GRAIN

It is very important to cool grain. Grain to be stored should be cooled after drying to within 15 degrees F of atmospheric temperature or 10 degrees F of grain already in the storage bin. Moisture migration from air to grain will occur if the grain is not cooled within these limits.

2.4.3 RECOMMENDED DRYING TEMPERATURES

CROP TYPE	MOISTURE CONTENT & POINTS OF INTEREST	PLENUM TEMPERATURE	MAXIMUM FINAL GRAIN TEMPERATURE	FINAL STORAGE LEVEL
BARLEY				
Feed		180 - 220°F	120°F	14%
Malting/Seed	Below 21%	120 - 150°F	105°F	
	Above 22%	110 - 130°F	105°F	

If light samples are experienced Maximum Plenum Temperature should not exceed 140°F

WARNING

Great care should be taken with the storage of barley grown for malting or seed between the actual harvesting of the material and the drying of it. Harvested crop must only be stored before drying for the minimum amount of time. It is recommended that the crop is stored so that the maximum depth does not exceed 2 feet.

CROP TYPE	MOISTURE CONTENT & POINTS OF INTEREST	PLENUM TEMPERATURE	MAXIMUM FINAL GRAIN TEMPERATURE	FINAL STORAGE LEVEL
OILSEED RAPE				
	Up to 17%	160 - 200°F	120°F	8%

SPECIAL NOTES

1. Plenum temperatures of up to 200°F have been used without apparent oil/quality loss
2. Excessive heat gives slower drying – cooling prolonged
3. Mature crops dry relatively easily
4. Desiccated early crops may contain 30% volume of immature seeds which are less easily dried
5. With moisture content above 17% - for every 2% increase in moisture content, reduce plenum temperature by 10°F for the initial drying period

CROP TYPE	MOISTURE CONTENT & POINTS OF INTEREST	PLENUM TEMPERATURE	MAXIMUM FINAL GRAIN TEMPERATURE	FINAL STORAGE LEVEL
OILSEED RAPE				
Seed	Reduce plenum temperature by 10°F	120 - 150°F	105°F	8%

CROP TYPE	MOISTURE CONTENT & POINTS OF INTEREST	PLENUM TEMPERATURE	MAXIMUM FINAL GRAIN TEMPERATURE	FINAL STORAGE LEVEL
HERBAGE SEEDS (SAFE DRYING AIR TEMPERATURES FOR 90% GERMINATION)				
(Grass Seed)				
PRG/IRG	Up to 25%	130°F	90°F	13%
	Between 25% – 30%	120°F	90°F	13%
	Between 30% – 35%	110°F	90°F	13%
	Between 35% – 40%	100°F	90°F	13%

NOTES

* Always grown for seed
* Grass seed does not flow easily over 22% moisture content
* Polish the dyer prior to use with dried barley or other dry grain

BEANS – see Peas/Field Beans

CROP TYPE	MOISTURE CONTENT & POINTS OF INTEREST	PLENUM TEMPERATURE	MAXIMUM FINAL GRAIN TEMPERATURE	FINAL STORAGE LEVEL
LINSEED				
Oil extraction and/or seed	Up to 15%	120 - 150°F	120°F	8%
***For every 2% increase in moisture content reduce plenum temperature by 10°F**				
		90 - 120°F	105°F	8%

CROP TYPE	MOISTURE CONTENT & POINTS OF INTEREST	PLENUM TEMPERATURE	MAXIMUM FINAL GRAIN TEMPERATURE	FINAL STORAGE LEVEL
OATS				
Feed		150 - 200°F	130°F	14%
Seed		110 - 150°F	105°F	14%

NOTE Oats for feed use can stand plenum temperatures up to 220°F.

CROP TYPE	MOISTURE CONTENT & POINTS OF INTEREST	PLENUM TEMPERATURE	MAXIMUM FINAL GRAIN TEMPERATURE	FINAL STORAGE LEVEL
PEAS/FIELD BEANS				
Processing / Protein		110 - 120°F	105°F	14%
NOTE In general protein is not affected by heat but excessive heat will cause splitting damage				
Seed	Below 24%	90 - 110°F	105°F	14%
Seed	Above 24%	70 – 90°F	105°F	14%
Seed	Above 27%	No heat to 50°F	105°F	14%

DIRECT HARVESTED

1. Can experience handling problems over 25% moisture content
2. Do not use loading auger over 25% moisture content (see below)
3. Special note – clean out the centre auger bin bottom after each load. This crop carries a lot of surface dirt which in the re-circulation process will find its way to the bin bottom well and create an extremely abrasive paste. This will shorten the life of the centre auger dramatically if the recommended cleaning process is not carried out.

DRYING FROM STORE

1. This crop is susceptible to splitting if excessive heat is used
2. Increase temperature in 5°F stages and check for splits to a maximum of 110°F plenum temperature : No heat - 110°F

CROP TYPE	MOISTURE CONTENT & POINTS OF INTEREST	PLENUM TEMPERATURE	MAXIMUM FINAL GRAIN TEMPERATURE	FINAL STORAGE LEVEL
WHEAT				
Feed		180 - 220°F	140°F	14%
Milling	Below 25%	150 - 180°F	120°F	14%
	Above 25%	140 – 170°F	120°F	14%
Seed		100 - 130°F	105°F	14%

SPECIAL NOTES

1. High gluten wheats mean slower drying
2. Wet cereals in general i.e. over 27% moisture content – dry carefully do not exceed Grain Final Safe Temperature. If this is apparent, stop the burner, allow dryer to continue circulating grain until cool, then re-light the burner and complete the drying process.
3. Seed wheat over 27% moisture content – use no heat to a maximum of 105°F plenum until moisture content is below 20%, then continue with care using a plenum temperature of 120°F maximum.

CROP TYPE	MOISTURE CONTENT & POINTS OF INTEREST	PLENUM TEMPERATURE	MAXIMUM FINAL GRAIN TEMPERATURE	FINAL STORAGE LEVEL
LUPINS				
Drying for Seed		no heat to 120°F		

* Furry seed – may generate fluff in handling
* Very tough skin
* Pre-drying treatment – pre-cleaning helpful if not essential

METHOD

1. Polish dryer with barley prior to handling
2. Be careful if moisture content 23% - 24% - augers may not handle
3. Recommended plenum temperatures no heat - 105°F - 120°F **ABSOLUTE MAXIMUM**

2.4.4 TEMPERATURE CONVERSION CHART

EG 120°F = 48.9°C OR 120°C = 48.9°F

0 ~ 90			91 ~ 141			142 ~ 260		
C		F	C		F	C		F
-17.8	0	32.0	32.8	91	195.8	61.1	142	287.6
-15.0	5	41.0	33.3	92	197.6	61.7	143	289.4
-12.2	10	50.0	33.9	93	199.4	62.2	144	291.2
-9.4	15	59.0	34.4	94	201.2	62.8	145	293.0
-6.7	20	68.0	35.0	95	203.0	63.3	146	294.8
-3.9	25	77.0	35.6	96	204.8	63.9	147	296.6
-1.1	30	86.0	36.1	97	206.6	64.4	148	298.4
1.7	35	95.0	36.7	98	208.4	65.0	149	300.2
4.4	40	104.0	37.2	99	210.2	65.6	150	302.0
7.2	45	113.0	37.8	100	212.0	66.1	151	303.8
10.0	50	122.0	38.3	101	213.8	66.7	152	305.6
10.6	51	123.8	38.9	102	215.6	67.2	153	307.4
11.1	52	125.6	39.4	103	217.4	67.8	154	309.2
11.7	53	127.4	40.0	104	219.2	68.3	155	311.0
12.2	54	129.2	40.6	105	221.0	68.9	156	312.8
12.8	55	131.0	41.1	106	222.8	69.4	157	314.6
13.3	56	132.8	41.7	107	224.6	70.0	158	316.4
13.9	57	134.6	42.2	108	226.4	70.6	159	318.2
14.4	58	136.4	42.8	109	228.2	71.1	160	320.0
15.0	59	138.2	43.3	110	230.0	71.7	161	321.8
15.6	60	140.0	43.9	111	231.8	72.2	162	323.6
16.1	61	141.8	44.4	112	233.6	72.8	163	325.4
16.7	62	143.6	45.0	113	235.4	73.3	164	327.2
17.2	63	145.4	45.6	114	237.2	73.9	165	329.0
17.8	64	147.2	46.1	115	239.0	74.4	166	330.8
18.3	65	149.0	46.7	116	240.8	75.0	167	332.6
18.9	66	150.8	47.2	117	242.6	75.6	168	334.4
19.4	67	152.6	47.8	118	244.4	76.1	169	336.2
20.0	68	154.4	48.3	119	246.2	76.7	170	338.0
20.6	69	156.2	48.9	120	248.0	77.2	171	339.8
21.1	70	158.0	49.4	121	249.8	77.8	172	341.6
21.7	71	159.8	50.0	122	251.6	78.3	173	343.4
22.2	72	161.6	50.6	123	253.4	78.9	174	345.2
22.8	73	163.4	51.1	124	255.2	79.4	175	347.0
23.3	74	165.2	51.7	125	257.0	82.2	180	356.0
23.9	75	167.0	52.2	126	258.8	85.0	185	365.0
24.4	76	168.8	52.8	127	260.6	87.8	190	374.0
25.0	77	170.6	53.3	128	262.4	90.6	195	383.0
25.6	78	172.4	53.9	129	264.2	93.3	200	392.0
26.1	79	174.2	54.4	130	266.0	96.1	205	401.0
26.7	80	176.0	55.0	131	267.8	98.9	210	410.0
27.2	81	177.8	55.6	132	269.6	101.7	215	419.0
27.8	82	179.6	56.1	133	271.4	104.4	220	428.0
28.3	83	181.4	56.7	134	273.2	107.2	225	437.0
28.9	84	183.2	57.2	135	275.0	110.0	230	446.0
29.4	85	185.0	57.8	136	276.8	112.8	235	455.0
30.0	86	186.8	58.3	137	278.6	115.6	240	464.0
30.6	87	188.6	58.9	138	280.4	118.3	245	473.0
31.1	88	190.4	59.4	139	282.2	121.1	250	482.0
31.7	89	192.2	60.0	140	284.0	123.9	255	491.0
32.2	90	194.0	60.6	141	285.8	126.7	260	500.0

3 PREPARING THE DRYER FOR OPERATION

3.1 SITING THE DRYER

Select a site as level as possible 50 feet (15 metres) from inflammable buildings. It is preferable to set the machine with the fan facing toward the prevailing wind.

If the dryer is being set on a level concrete slab simply lower the adjustable jacks, raising the wheels slightly off the ground, bringing the machine to a level position. It is important that the central auger is vertical. Use the spirit levels that are positioned on the dryer transport chassis.

If the dryer has been placed straight on to soil then a board of at least 2" x 8" x 12" should be placed under each leg.

3.2 ELECTRICAL CONNECTIONS

Standard equipment; 3 phase electric supply, 380-400V, 50Hz, requires the following supply service.

Model	1200	2000	2910	3810	4810
Supply	80Amp	100Amp	140Amp	160Amp	180Amp

All wiring to the electrical control panel should be done in compliance with wiring codes by a qualified electrician

3.3 DIESEL FUEL SUPPLY

The diesel tank is located on the left hand side of the dryer. The fuel supply to the burner has a filter on the suction side. There is a second filter inside the fuel pump and each nozzle has a filter on it. All filters should be checked / cleaned or replaced as required, depending on usage and cleanliness of diesel supply, but at least once per year.

The fuel pump is factory set at 12 bar pressure for Diesel fuel.

3.4 POSITIONING THE TOP FOLD DOWN AUGER

The type of discharge head will vary depending on the specification ordered, therefore the following descriptions may vary slightly on machines.

THERE IS A CORRECT METHOD THAT MUST BE FOLLOWED:

STANDARD MACHINES

step one: First examine the illustration below (fig 3A). Climb the external ladder and stand on the plenum. Using the lever marked 1 in fig 3A pull the over-centre mechanism bringing the folding auger toward the centre of the dryer. Lock the lever in position using the wing nut item number 2.

FAILURE TO FOLLOW STEP TWO WILL RESULT IN MATERIAL DAMAGE TO THE SIDE SHEETS OF THE DRYER.

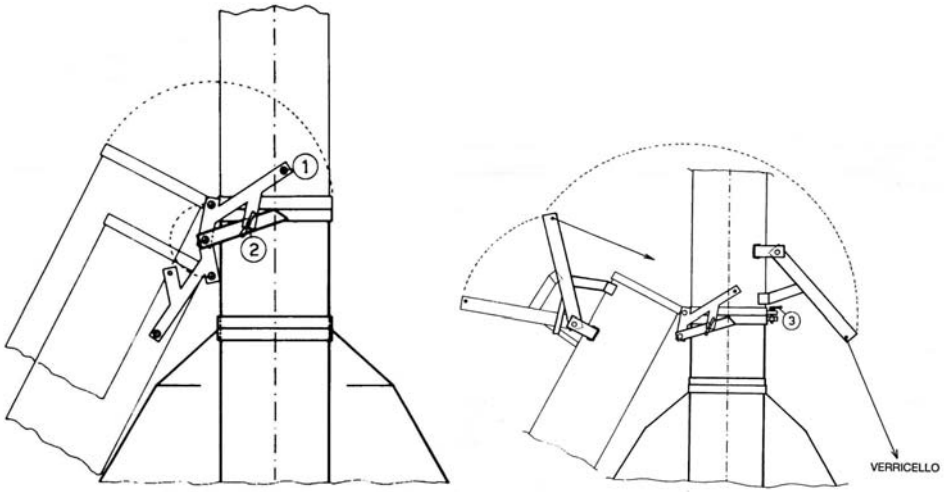

FIG 3A FIG 3B

step two: Raise the external extending side sheets to the top of their movement range, fit the 4 safety pins on all four top extension supports and lower the extension top until the pins start to carry the load.

step three: Using the vertical auger winch (beside the control cabinet) **raise** the folding auger into its vertical position. Once the auger is correctly positioned climb the ladder and tighten up the wing nut item 3 in fig 3B.

DURING DRYER OPERATION THE VERTICAL AUGER WINCH WIRE TO THE TOP AUGER SHOULD NOT BE UNDER TENSION.

MACHINE SUPPLIED WITH EXTENDED DISCHARGE OR DUST EXTRACTOR

step one: The top section of vertical auger will be supplied loose becuse of transport height restrictions. The section of auger must first be lifted and connected to the main vertical auger tube using the pivot pin supplied. Then connect the vertical auger winch wire to the top section vertical auger tube. Using the vertical auger winch (mounted at the front of the machine) **raise** the folding auger into its vertical position. Once the auger is correctly positioned climb the ladder and tighten up the wing nut item 3 in fig 3B.

step two: Raise the external extending side sheets to the top of their movement range, fit the 4 safety pins on all four top extension supports and lower the extension top until the pins start to carry the load.

3.5 PREPARING FOR TRANSPORT

TO PREPARE THE DRYER FOR TRANSPORT FOLLOW ALL THE STEPS ABOVE IN REVERSE ORDER WITH **ONE ADDITIONAL STEP**:

First Step: To start the lowering of the top auger extension pull the wire that is positioned at the rear of the dryer and has at its end a triangle steel pull handle. Important you must undo the wing nut item 3 in fig 3b first and loosen the vertical auger winch 3-4 rotations.

3.6 POSITIONING THE LOADING AUGER

Using the loading auger winch gently lower the loading auger into the horizontal position. In the process checking that the driving lugs do not directly hit each other. adjust the support feet at the end of the hopper and check the inner/outer auger section fit properly and are sealed to prevent grain loss.

3.7 GRAIN CLEANER

The grain cleaner box is mounted on the vertical auger tube inside the plenum chamber, the box is fitted to the vertical tube with a single bolt fixing around the tube which needs to be removed to allow the box movement away from the tube. The cleaner screen are located in position by one M13 setscrew, by removing this the screen will pull out and can be replaced with the correct screen for the crop being dried.
The cleaner is pipe is pressurised from the main fan pressure via a access hole on the top of the cleaner box, this access hole can be opened/closed to set the pressure required to keep the pipe clear.

Two screens are supplied as std – Oil Seed Rape screen (1.5mm) and Barley/Wheat screen (2.5mm). A blank screen is fitted from factory.

3.8 POSITIONING THE DISCHARGE AUGER

The standard discharge auger is mounted over the top of the vertical auger and rests on the flange welded to the vertical tube. The auger is free swinging to discharge left or right. Mount the top rim support cradle on the chosen discharge side and connect the power supply to the discharge motor.

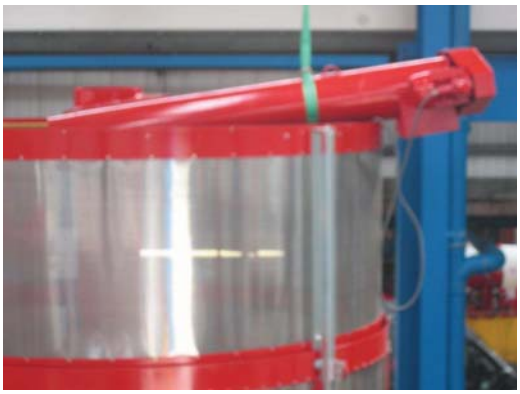

Extended discharge augers and/or dryers fitted with a dust extractor are connceted to the vertical auger by means of a connector box which bolts onto the discharge auger and clamps around the vertical auger tube. Extended discharge augers will require additional support at the motor end of the auger from grain store building

4 OPERATING INSTRUCTIONS

4.1 CONTROL BOARD

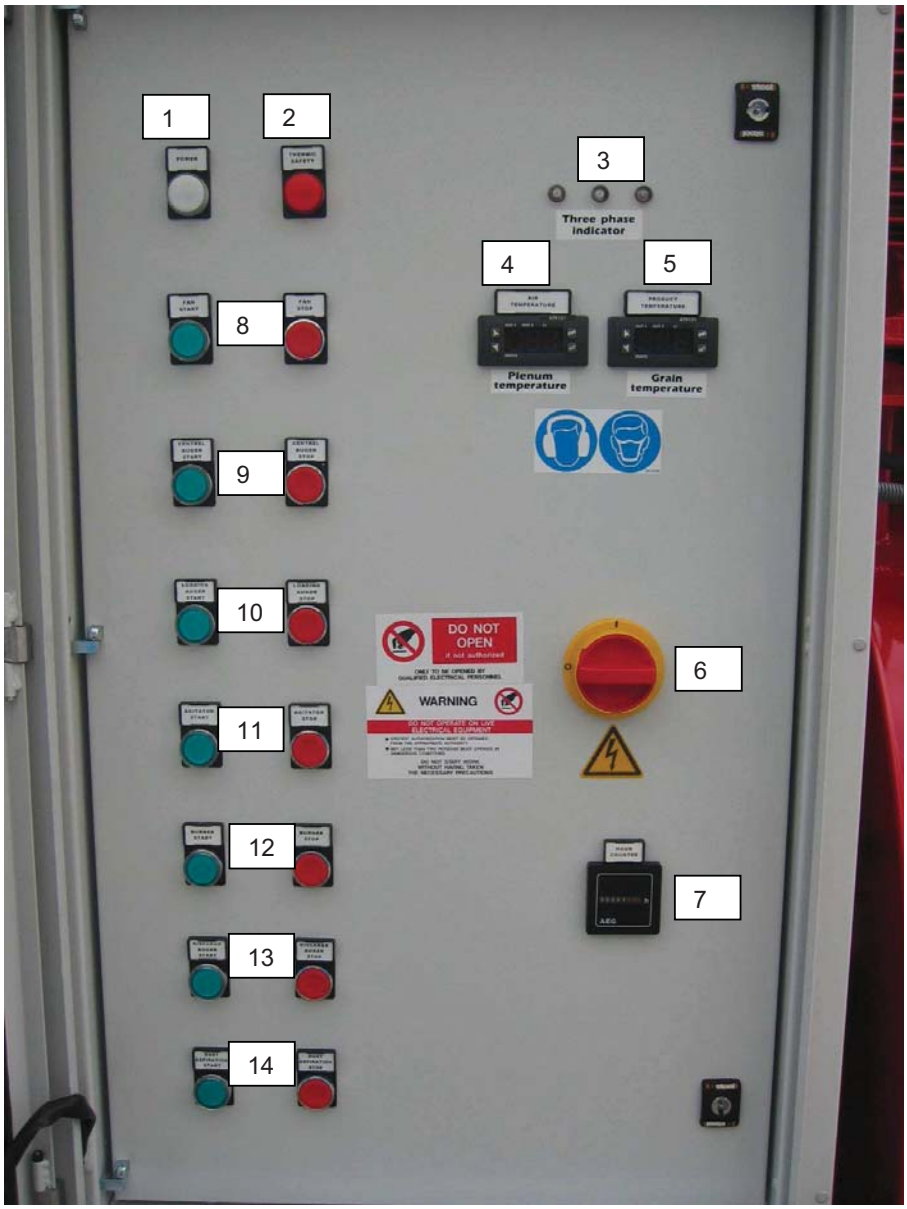

1. Power indicator
2. Thermic safety indicator
3. Three phase indicator
4. Plenum temp thermostat
5. Grain temp thermostat
6. Power Isolator switch
7. Hour clock
8. Fan start/stop
9. Central auger start/stop
10. Loading auger start/stop
11. Agitator start/stop
12. Burner start/stop
13. Discharge auger start/stop
14. Dust extractor (optional)

Picture 4.1 control board outer

4.1 CONTROL BOARD

PIC 2. Magna Dryer electric control board panel

1 - Safety thermostat - Fan
2 - Safety thermostat - Plenum chamber
3 - Transformer
4 - Relays
5 – Timer – Fan contactor
6 - Fuses
7 - Motor - Circuit Breakers
8 - Motor – Contactors
9 - Terminal block

4.2 PLENUM & GRAIN TEMPERATURE THERMOSTATS

Recommended operating temperatures - Section2.4.3

Plenum & Grain thermostats are factory set to operate in °F and have one temp setting. When powered, the display normally shows the measured temperature.

Press 'SET' – the last temperature set point used will appear on the display, using the '↑ ' key to raise or '↓' key to lower the temperature setting °F. The change will appear on the display, when the desired temperature appears on the display, press 'SET' this will save the new setting and return to the current temperature reading on the probe.

When operating, a light below the symbol 'OUT 1' will indicate where the actual temperature reading is in relation to the preset temperature. Ie If the grain temp setting is 112°F and the grain probe is currently reading 102°F no light will illuminate, when the plenum temperature reaches the set temperature 112°F a green light will illuminate below 'OUT 1'.

4.3 PLENUM SAFETY CONTROL

The plenum safety control thermostat is mounted inside the control panel, it safeguards against excessive plenum temperatures, it's temperature probe is positioned in the plenum chamber. During operation, the dryer checks the safety thermostat to make certain the plenum temperature falls within the safe operating range. If so, operation continues. Should the thermostat open at any time during operation, power to the control board will be interrupted, halting operation of the dryer.

The safety thermostat operates in °C and should be set approx 30°C above the running Plenum Air Temperature setting (Note; Plenum temperature is °F, see temp conversion chart)

ie Plenum temperature set at 180°F – set safety thermostat at 112°C

4.4 THERMIC SAFETY

The thermic safety warning light on the control board indicates if any of the electric motor circuit breakers have tripped. This protects the motor from over loading, ie if an auger was to jam. Check all the circuit breakers and reset any which have tripped – checking the driveline and motor in question.

4.5 LOADING & OPERATION

Turn on the mains power supply. Check the diesel tank has sufficient fuel.

1. Turn control board power isolator to ‘ON’ position

2. **Set** Grain & Plenum thermostats to the required temperatures. Ensure the plenum high limit thermostats are set to the correct temperature.

3. **Start** the ‘Central auger’ & ‘Intake auger’ motors. When the dryer is full, **stop** the ‘intake auger’ motor.
   The grain bin will fill until the grain is approx 150 - 250mm below the top rim. This amount depends on initial grain moisture, as wet grain is heated it will expand. Leaving space at the top of the dryer provide the additional room needed and prevents the dryer from spilling over.

   DO NOT LEAVE GRAIN IN THE DRYER OVERNIGHT. Grain that remains in the dryer overnight will absorb moisture and swell. This swelling can cause the vertical auger to jam.

   NOTE The agitator motor is not used during loading to maximise the loading speed and reduce the grain recirculation during loading.

4. **Start** the ‘Agitator’ and ‘Fan motors’.

5. **Start** the ‘Burner motor’, the ignition sequence will operate automatically.

6. When the grain has reached the pre-set grain temperature, the burner will be extinguished automatically and the dryer will start cooling the crop.

7. When the grain has cooled sufficiently, **stop** the ‘Fan motor’.

8. **Start** the ‘Discharge motor’ to empty the grain bin.

There is an emergency stop button mounted at the control board.

4.6 HOW TO GET THE BEST PERFORMANCE OUT OF YOUR DRYER

ON THE FIRST DRYING OF EACH DIFFERENT CROP TYPE ON YOUR FARM PROCEED AS FOLLOWS:

Set the finished grain temperature to 125 degrees F that is well above the setting that you will finally use.

Check the finished grain temperature gauge reading from time to time. When the grain temperature has achieved 100 degrees F take your first sample to check for actual grain moisture.

Depending upon altitude, outside air temperature and if it is a dry or wet day you will record approximately between 17% and 20% moisture.

Continue to run the dryer and take a further sample of grain at 102 degrees F. Continue in this fashion until the grain is half a percent above finished moisture content required. So if you are looking for 14% moisture content and you achieve 14½% at 108 degrees F press the button marked P on the grain thermostat, press the down arrow to bring the temperature from 125 degrees down to 108 degrees. The burner will cut off and the cooling cycle will begin, press P to save this new setting.

When all the grain is cooled take a further sample before emptying the dryer to check the finished moisture content.

If the finished moisture content is below 14% then you can fine-tune the finished grain temperature by decreasing the value locked into the finished grain temperature gauge by 1 degree.

After two or three loads you will achieve the right balance for the particular crop type. At this point write down the plenum temperature you have used and the finishing grain temperature for that particular crop type as a future record.

The major variable to consider is not moisture content, outside air temperature etc., but rather the plenum temperature used. There is a balance between extra heat and therefore extra fuel usage against time of drying.

The recommendations given in our Crop Drying Recommendations are a good starting point. (Section 2.4.3)

NOTE: **WHEN DRYING ANY CROPS FOR SEED OR MALTING YOU MUST NOT USE PLENUM AIR TEMPERATURES HIGHER THAN OUR RECOMMENDATION.**

4.7 BURNER - RIELLO

For full details on the Riello burner please refer to the separate Riello burner manual. There are occasions when drying temperatures required will vary significantly from the norm. For example when drying seed crops you may need to use smaller nozzles to achieve the correct plenum temperatures.

In Oil Seed Rape because of crop density overall air flow can be reduced, heat retention is increased and again it may be necessary to use smaller nozzles.

BURNER DESCRIPTION

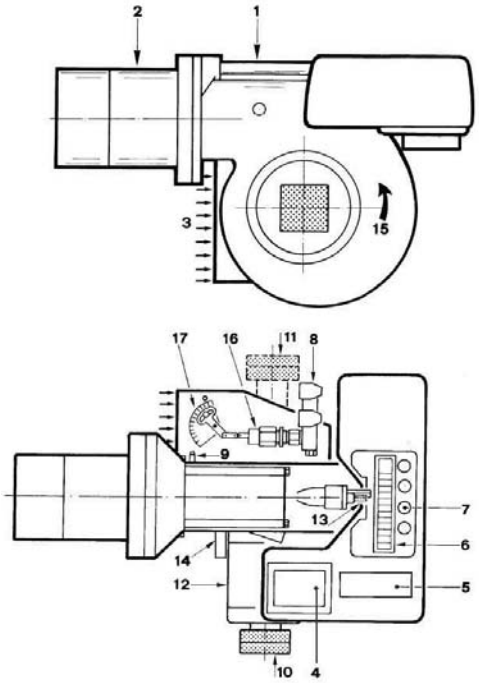

1 Guides for opening the burner and inspecting the combustion head
2 Combustion head
3 Fan air inlet
4 Ignition transformer
5 10 pole socket
6 Terminal strip
7 Fairleads for wiring carried out by the installer
8 Valve assembly
9 Fan pressure test point
10 Pump PRESS GW-1G-2G-3G
11 Pump PRESS 4G
12 Electrical motor
13 Screw for combustion head adjustment
14 Photocell for flame presence control
15 Fan rotation direction
16 Variable stroke hydraulic cylinder. Opens the fan gate valve to the value necessary at the 2nd stage of operation.
17 Indexed selector.

This selector adjusts the opening of the fan gate to the value necessary at the 1st stage of functioning.

CHOICE OF NOZZLES FOR 1ST AND 2ND STAGE

Both nozzles must be chosen from among those listed in Table (H). The first nozzle determines the delivery of the burner in the 1st stage. The second nozzle works together with the 1st nozzle to determine the delivery of the burner in the 2nd stage.
Use nozzles with atomization angles of 60° and, if possible, at a pressure of 12 bar.
The two nozzles usually have equal deliveries, but the 1st stage nozzle may have the following specifications if required: - a delivery less than 50% of the total delivery whenever the back-pressure peak must be reduced at the moment of firing; - a delivery higher than 50% of the total delivery whenever the combustion during the 1st stage must be improved.

Burner	Nozzles	delivery kg/h (1)			kW
	60°-GPH	10 bar	12 bar	14 bar	12 bar
PRESS 1G	2,00	7,7	8,5	9,2	100,8
	2,25	8,6	9,5	10,4	112,7
	2,50	9,6	10,6	11.5	125,7
	3,00	11.5	12,7	13,6	150,6
	3,50	13,5	14,8	16,1	175,5
	4,00	15,4	17,0	18,4	201,6
	4,50	17,3	19,1	20,7	226,5
	5,00	19,2	21,2	23,0	251,4
	5,50	21,1	23,3	25,3	276,3
PRESS 2G	4,00	15,4	17,0	18,4	201,6
	4,50	17,3	19,1	20,7	226,5
	5,00	19,2	21,2	23,0	251,4
	5,50	21,1	23,3	25,3	276,3
	6,00	23,1	25,5	27,7	302,4
	6,50	25,0	27,6	30,0	327,3
	7,00	26,9	29,7	32,3	352,3
PRESS 3G	6,00	23,1	25,5	27,7	302,4
	6,50	25,0	27,6	30,0	327,3
	7,00	26,9	29,7	32,3	352,3
	7,50	28,8	31,8	34,6	377,2
	8,30	31,9	35,2	38,3	417,5
	9,50	36,5	40,3	43,6	478,0
	10,50	40,4	44,5	48,4	527,8
	12,00	46,1	50,9	55,3	603,7
PRESS 4G	9,50	36,5	40,3	43,8	478,0
	10,50	40,4	44,5	48,4	527,8
	12,00	46,1	50,9	55,3	603,7
	13,80	53,1	58,5	63,6	693,8
	15,30	58,2	64,9	70,5	769,7
	17,50	67,3	74,2	80,7	880,0

Tab. H

Example with the Press 1G Model:

Boiler output = 270 kW - efficiency 90 %

Output required by the burner =
270 : 0.9 = 300 kW;
300 : 2 = 150 kW per nozzle;

therefore, two equal, 60°, 12 bar nozzles are required: 1° = 3.00 GPH - 2° = 3.00 GPH,

or the following two different nozzles:
1° = 2.50 GPH - 2° = 3.50 GPH,
or 1° = 3.50 GPH - 2° = 2.50 GPH.

Model	Burner	1°	2°	Total	Spare
120E	2G	5	7	12	4
1200	2G	6.5	6.5	13	4
2000	3G	8	11	19	6.5
2910	4G	11	16	27	9
3810	4G	16	16	32	9
4810	4G	16	16	32	9

NOZZLE ASSEMBLY

The nozzle for the 1st stage of operation is the one lying beneath the firing electrodes Fig. (14). With the burner open on the slide bars, the two nozzles (1, Fig 13) are removed using a 16 mm wrench. When refitting do not use any sealing products such as gaskets, sealing compound, or tape. The nozzles must be screwed into place tightly but not to the maximum torque value provided by the wrench.
Be careful to avoid damaging the nozzle sealing seat. Make sure that the electrodes are positioned as shown in Figure (14). Lastly, close the burner by screwing in the two screws.

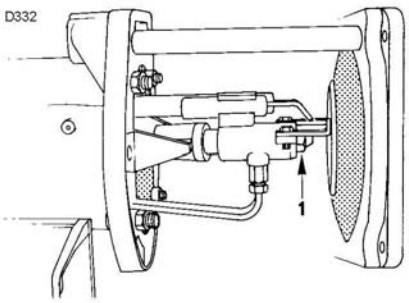

Fig. 13

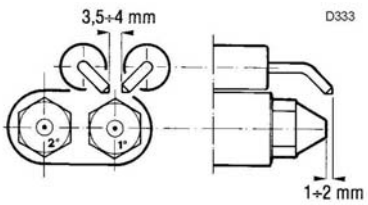

Fig. 14

CALIBRATIONS BEFORE FIRING

Combustion head setting

The setting of the combustion head depends exclusively on the delivery of the burner in the 2nd stage - in other words, the combined delivery of the two nozzles selected (Tab H).
Set the screw 1)(Fig 16) in such way that its rear surface corresponds to the notch number shown in Fig 18.

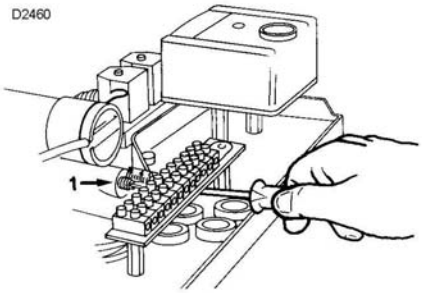

Fig. 16

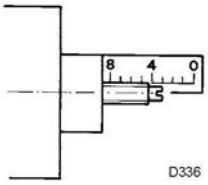

Fig. 17

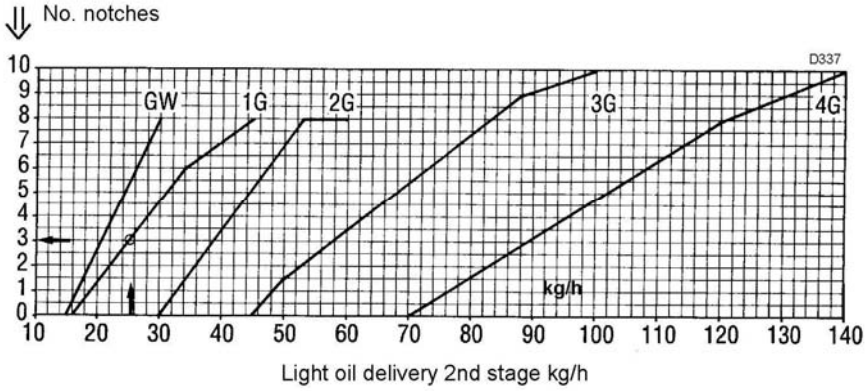

Fig. 18

Example:
The PRESS 1G Model with two 3.00 GPH nozzles and 12 bar pump pressure.

Find the delivery of the two 3.00 GPH nozzles in Table (H), Page 26: 12.7 + 12.7 = 25.4 kg/h.
Diagram (G) indicates that for a delivery of 25.4 kg/h the PRESS 1G Model requires the combustion head to be set to approx. three notches, as shown in Figure (17).

Fuel pump adjustment

No pre settings are required for the pump, which is set to 12 bar by the manufacturer. This pressure must be checked and adjusted (if required) after the burner has been ignited.
The only operation required in this phase is the application of a pressure gauge to check pressure setting (Fig 27.28.29).

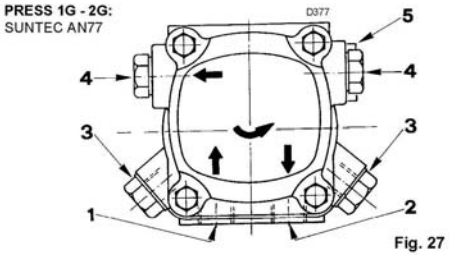

Fig. 27

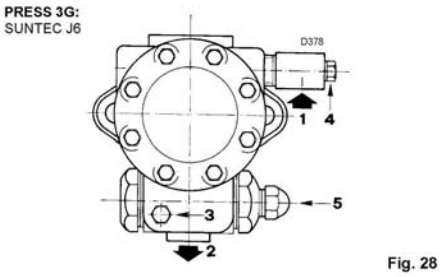

Fig. 28

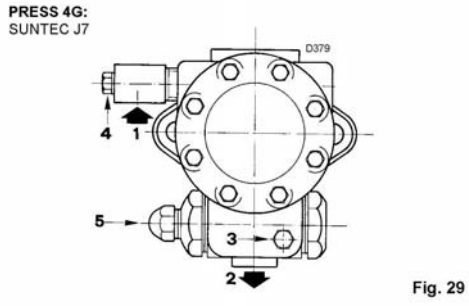

Fig. 29

Pump	AN	J
1 Suction line	G1/4”	G1/2”
2 Return line	G1/4”	G1/2”
3 Pressure gauge attachment	G1/8”	G1/8”
4 Suction gauge connection	G1/8”	G1/2”

5 Pressure adjustment screw:
Right rotation = pressure increases
Left rotation = pressure decreases

G = cylindrical thread
The connector to be screwed into the cylindrical thread G must be equipped with a sealing washer.
Do not screw a connector with a conical thread (NPTF) into the cylindrical thread G.

BURNER ELECTRICAL CONNECTION

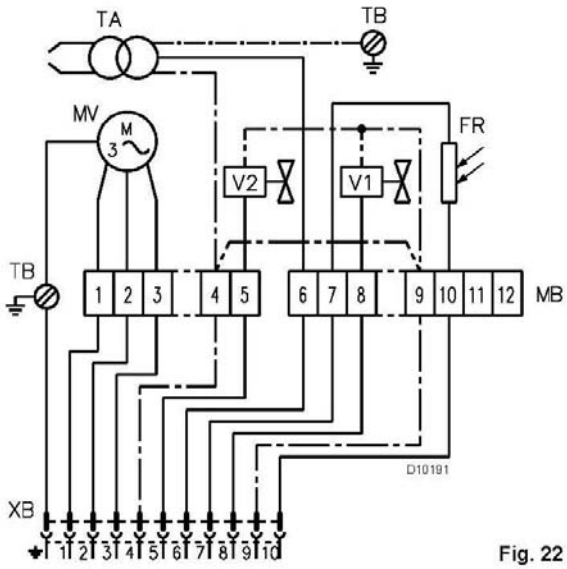

Fig. 22

Key to Layout (Fig. 22)
MB- Burner terminal strip
TB- Burner ground (earth) connection
MV- Fan motor
TA- Ignition transformer
V1- 1st stage solenoid valve
V2- 2nd stage solenoid valve
FR- Photocell
XB- 10 pole socket

BURNER AIR SETTING

GPH nozzle 1st stage -N° Set-point

PRESS 1G		PRESS 2G		PRESS 3G		PRESS 4G	
GPH	No.	GPH	No.	GPH	No.	GPH	No.
2,00	1	4,00	1	6,00	1,5	9,5	1,5
2,25	1	4,50	1	6,50	2	10,50	2
2,50	1,5	5,00	1,5	7,00	2	12,00	2
3,00	2	5,50	2	7,50	2.5	13,80	2,5
3,50	2,5	6,00	2	8,30	2,5	15,30	2,5
4,00	2,5	6,50	2,5	9,50	3	17,30	3
4,50	2,5	7,00	3	10,50	3,5		
5,00	3			12,00	4		
5,50	3						

Tab. I

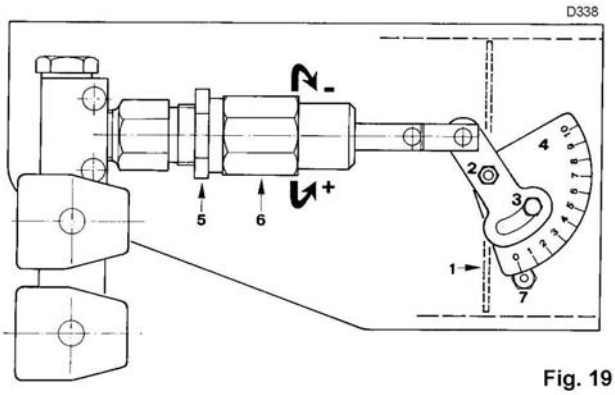

Fig. 19

Fan gate adjustment

1st stage:
The air gate valve 1)(Fig 19) is set using the indexed selector 4)(Fig 19)
Loosen the screw 3)(Fig 19) and the nut 2)(Fig 19) and shift the indexed selector 4) so that the index finger 7)(Fig 19) corresponds to the required notch setting indicated in Table (I) according to the 1st stage nozzle's delivery.

Example
The PRESS 1G Model burner - 3.00 GPH nozzle.
The indexed selector must be set to notch 2.

2nd stage:
The air gate valve 1)(Fig 19) must be set using the cylinder 6)(Fig 19). This setting must be adapted case by case to the burner's delivery and combustion chamber pressure. The first time the burner is fired, the hydraulic cylinder setting should be left as originally set by the manufacturer: at approximately half of its full stroke.

In summary, the operations and settings that must be performed prior to firing the burner for the first time are as follows:

- choice of the two nozzles;
- setting of the combustion head;
- setting of the fan's air gate valve for the 1st stage.

The following require no adjustment operations and may remain as they are provided:
- pump pressure;
- setting of the fan's air gate valve for the 2nd stage.

5 MAINTENANCE

Please take care not to over grease. Many of the bearings and rollers on this dryer require greasing only once per season. More harm will be done by over enthusiastic application than benefit.

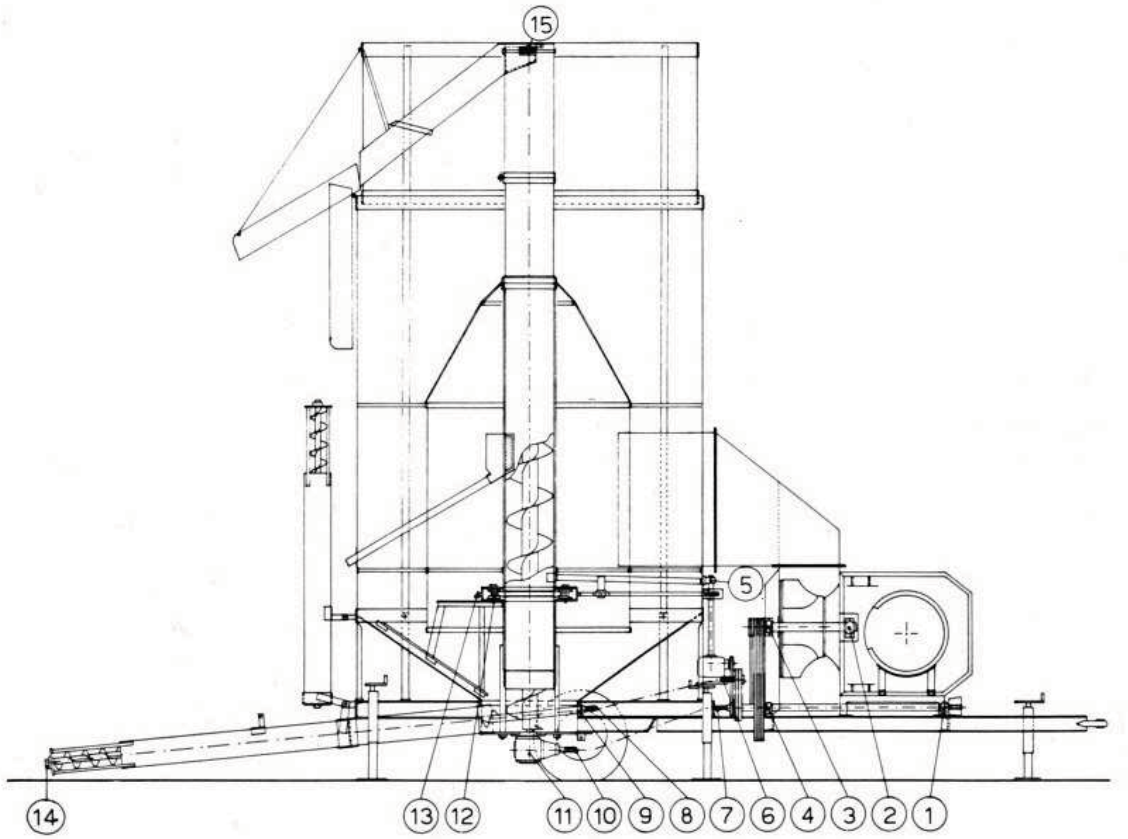

Picture 5.1 **POINTS TO LUBRICATE**

- 2, 3 - FAN SHAFT BEARINGS (GREASE LIGHTLY AT THE END OF EACH SEASON)
- 5,9,14 – LOADING AUGER & AGITATOR SUPPORT BEARINGS (GREASE LIGHTLY AT 1 MONTH INTEVALS AND/OR AT THE END OF EACH SEASON)
- 12 - AGITATOR SUPPORT ROLLERS (GREASE LIGHTLY EVERY 20 DAYS)
- 13 - CHAIN (DRY FILM SPRAY LUBRICATE AT THE END OF EACH SEASON)
- 11,15 - VERTICAL AUGER SUPPORT BEARING TOP & BOTTOM (GREASE LIGHTLY EVERY 15 DAYS.)
- 6 – AGITATOR GEARBOX (CHECK OIL LEVEL& TOP UP AS REQUIRED ONCE EVERY SEASON)
- 7 – SUPPORT JACK STANDS (GREASE ONCE EVERY SEASON)
- WINCHES (DRY FILM SPRAY LUBRICANT ONCE EACH SEASON)

5.2 GENERAL OPERATING MAINTENANCE

- KEEP THE WORKING AREA CLEAR OF CHAFF AND OTHER COMBUSTIBLE MATERIAL
- CLEAN THE INSIDE PLENUM CHAMBER
- CHECK AGITATOR CHAIN AND CHAIN TENSIONER
- COVER AND PROTECT ALL THE ELECTRIC COMPONENTS FROM HUMIDITY
- CHECK THE AGITATOR ROLLER BEARINGS, REPLACE AS NECESSARY
- CHECK THE VERTICAL AUGER AND THE VERTICAL TUBE FOR WEAR
- CHECK ALL DRIVE BELT TENSIONS
- CHECK THE CONDITION OF THE FURNACE'S REFRACTORY MATERIAL
- CHECK THE CONDITION OF THE STEEL BOTTOM OF THE FURNACE
- CHECK THE CONDITION OF THE PROTECTION GUARD OF THE FAN SUPPORT, PLACED AT THE EXIT OF THE FURNACE FIRE MOUTH BETWEEN FURNACE AND FAN
- CHECK THE CONDITION OF CABLES AND WINCHES

5.3 ELECTRIC COMPONENT MAINTENANCE

- CHECK THE CONDITION OF MOTORS AND CABLES REGULARLY
- CLEAN MOTOR HOUSINGS AND FANS USING COMPRESSED AIR
- ELECTRIC MOTORS, CONTROL PANEL AND ALL WIRING SHOULD BE INSPECTED BY A QUALIFIED ELECTRICIAN PERIODICALLY
- ENSURE THE CONTROL ENCLOSURE IS KEPT CLEAN

6 SAFETY WARNINGS

In addition to the design and configuration of equipment, hazard control and accident prevention are dependent upon the awareness, concern, prudence and proper training of personnel in the operation, transport, maintenance and storage of equipment. Lack of attention to safety can result in accident, personal injury, reduction of efficiency and worst of all – loss of life.

Watch for safety hazards and correct deficiencies promptly.

Use the following safety precautions as a general guide to safe operations when using the machine.

Additional safety precautions are used throughout this manual for specific operating and maintenance procedures. Read this manual and review the safety precautions often until you know the limitations.

6.1 SAFETY PRINCIPLE

The following are general rules for the users of the machine:

BEFORE USING THE MACHINE CAREFULLY READ ALL PARTS OF THIS MANUAL. REFRAIN FROM USING THE DRYER UNTIL THE ENTIRE MANUAL (AND ALL ITS ATTACHMENTS) ARE UNDERSTOOD.

6.2 WARNINGS AND DANGERS

DO NOT ALLOW ANYONE TO OPERATE THE MACHINE WHO IS NOT IN GOOD PHYSICAL AND MENTAL HEALTH.

KEEP CHILDREN, VISITORS AND ALL UNTRAINED PERSONNEL AWAY FROM THE MACHINE WHILE IN OPERATION.

DO NOT USE THE DRYER WITHOUT ALL THE SAFETY GUARDS IN THE CORRECT POSITION.

DO NOT CARRY OUT MAINTENANCE WORK AND/OR REPAIRS UNTIL THE MAIN POWER SWITCH TURNED TO OFF.

DO NOT UNDER ANY CIRCUMSTANCES ENTER THE DRYER THROUGH THE INSPECTION HATCH UNTIL THE MAIN SWITCH TURNED TO OFF. FAILURE TO FOLLOW THIS INSTRUCTION MAY CAUSE SERIOUS INJURY. EXPLANATION – SHOULD THE AGITATOR ARM RECIRCULATE WHILST THE OPERATOR IS ENTERING THE DRYER OR INSIDE THE DRYER

DO NOT ALTER THE DIMENSIONS OR SHAPE OF THE ADJUSTABLE JACK FEET.

DO NOT MOVE THE DRYER WITH TYRES THAT ARE DEFLATED OR NOT SUITABLE FOR SERVICE.

DO NOT MOVE THE MACHINE UNLESS IT IS FULLY IN THE TRANSPORT MODE I.E. WITH THE LOADING AUGER FULLY RAISED FOLD DOWN AUGER FULLY LOWERED AND THE EXTENDING SIDE SHEETS FULLY CLOSED.

DO NOT ALLOW ANY OBSTRUCTION TO THE AIR INLET.

DO NOT THROW ANY TYPE OF OBJECT INTO THE DRYER, THE BURNER UNIT AND THE INLET AIR DUCT.

DO NOT TOUCH THE INSIDE OF THE BURNER BOX ASSEMBLY WHEN IT IS WORKING OR FOR A PERIOD OF AT LEAST ONE HOUR AFTER WORK.

DO NOT CLIMB OR USE THE LADDER WITHOUT FIRST STOPPING THE DRYER AND ISOLATING THE ELECTRIC POWER.

DO NOT ALLOW MORE THAN ONE PERSON TO BE ON THE LADDER AT ANY ONE TIME .

6.3 SAFETY GUARDS AND WARNING LOGOS

For safety the dryer is supplied with the necessary safety guards and warning logos.

SHOULD THE SAFETY GUARDS BE REMOVED TO CARRY OUT MAINTENANCE OR CLEANING IT IS THE OPERATORS RESPONSIBILTY TO ENSURE THAT THEY ARE REPLACED IN THEIR ORIGINAL POSITION PRIOR TO OPERATING THE DRYER.

6.3.1 EMERGENCY STOP BUTTON

The red emergency button is positioned on the main control panel: if pushed it instantly stops all electrical power to the machine.

6.4 RESIDUAL RISKS

Some residual risks cannot be avoided in the natural process of grain drying. The following list is indicative not exhaustive

DO NOT PLACE YOUR HANDS OR ANY OTHER PART OF THE BODY THROUGH THE SAFETY MESH POSITIONED OVER THE LOADING AUGER

BE AWARE OF POSIBLE DANGER WHILT LOWERING THE LOADING AUGER INTO ITS WORKING POSITION

BE AWARE OF POSIBLE DANGER WHEN POSITIONING THE DRYER USING THE ADJUSTABLE JACKS

6.5 NOISE LEVELS

The level of acoustic pressure of the Magna mobile dryers has been measured with the machine loaded while working in a open field on the 4 compass points at 1,5 meters distance and at 1,6 meters height from ground. The level is between 77dB(A) and 88 dB(A).

7 TROUBLE SHOOTING 7.1 THE BURNER

FAULT	PROBABLE CAUSE	SUGGESTED REMEDY
The burner does not start	- No electrical power supply	Close all switches - Check fuses
	- A limit or safety control device is open	Adjust or replace
	- Motor lock-out	Reset thermal cutout
	- Pump is jammed	Replace
	- Erroneous electrical connections	Check connections
	- Defective motor command control device	Replace
	- Defective electrical motor	Replace
	- Photocell short-circuit	Replace photocell
	- Light is entering or flame is simulated	Eliminate light or replace control box
The burner starts but stops almost immediately	- Missing phase thermal cutout triggers	Reset thermal cutout when third phase returns
After pre-purge the burner goes to lock-out and the flame does not appear	- No fuel in tank; water on tank bottom	Top up fuel level or suck up water
	- Inappropriate head and air damper adjustments	Consult manual
	- Light solenoid valve fails to open	Check connections; replace coil
	- Nozzle clogged, dirty, or deformed	Replace
	- Dirty or poorly adjusted firing electrodes	Adjust or clean
	- Grounded electrode due to broken insulation	Replace
	- High voltage cable defective or grounded	Replace
	- High voltage cable deformed by high temperature	Replace or protect
	- Ignition transformer defective	Replace
	- Erroneous valve or transformer electrical connections	Check connections
	- Pump unprimed	Prime pump and see "Pump unprimes"
	- Pump/motor coupling broken	Replace
	- Pump suction line connected to return line	Correct connection
	- Valves up-line from pump closed	Open
	- Filters dirty: line - pump - nozzle	Clean
	- Incorrect motor rotation direction	Change motor electrical connections
The burner goes to lock-out right after flame appearance	- Delayed firing by electrodes or poorly adjusted head	Adjust
	- Defective photocell	Replace
	- Dirty photocell	Clean
Firing with pulsations or flame detachment	- Poorly adjusted head	Adjust according to Manual
	- Poorly adjusted firing electrodes	Adjust according to Manual
	- Poorly adjusted fan air gate: too much air	Adjust
	- Nozzle unsuited for burner or boiler	See Nozzle Table; reduce 1st stage
	- Defective nozzle	Replace
	- Inappropriate pump pressure	Adjust according to Manual
The burner does not pass to 2nd stage	- Control device TR does not close	Adjust or replace
	- 2nd stage sol. valve coil defective	Replace
	- Piston jammed in valve unit	Replace entire unit
or fuel passes to 2nd stage but air remains in 1st	- Low pump pressure	Increase
	- Defective cylinder	Replace
Unever fuel supply	- Check if cause is in pump or in the fuel power supply system	Feed burner from tank fuel supply systemlocated near burner
Interminally rusted pump	- Water in tank	Suck water from tank bottom with separate pump
Noisy pump, instable pressure	- Air has entered the suction line	Tighten connectors
	Depression value too high (higher than 35 cm Hg):	
	- Tank/burner height difference too great	Feed burner with loop circuit
	- Piping diameter too small	Increase
	- Suction filters clogged	Clean
	- Suction valves closed	Open
	- Paraffin solidified due to low temperature	Add additive to light oil
Pump unprimes after prolonged pause	- Return pipe not immersed in fuel	Bring to same height as suction pipe
	- Air enters suction piping	Tighten connectors
Pump leaks light oil	- Leakage from sealing organ	Replace pump
Smoke in flame - dark Bacharach	- Not enough air	Adjust head and fan gate according to Manual
	- Nozzle worn or dirty	Replace
	- Nozzle filter clogged	Clean or replace
	- Erroneous pump pressure	Adjust to between 10 - 14 bar
	- Dirty fan	Clean
	- Flame stability disk dirty, loose, or deformed	Clean, tighten in place, or replace
	- Boiler room air vents insufficient	Increase
- yellow Bacharach	- Too much air	Adjust head and fan gate according to Manual

FAULT	PROBABLE CAUSE	SUGGESTED REMEDY
Dirty combustion head	- Nozzle or filter dirty	Replace
	- Unsuitable nozzle delivery or angle	See recommended nozzles
	- Loose nozzle	Tighten
	- Impurities on flame stability spiral	Clean
	- Erroneous head adjustment or not enough air	Adjust as per Manual instructions; open gate valve
	- Blast tube length unsuited to boiler	Contact boiler manufacturer

7.2 FUEL CIRCUIT

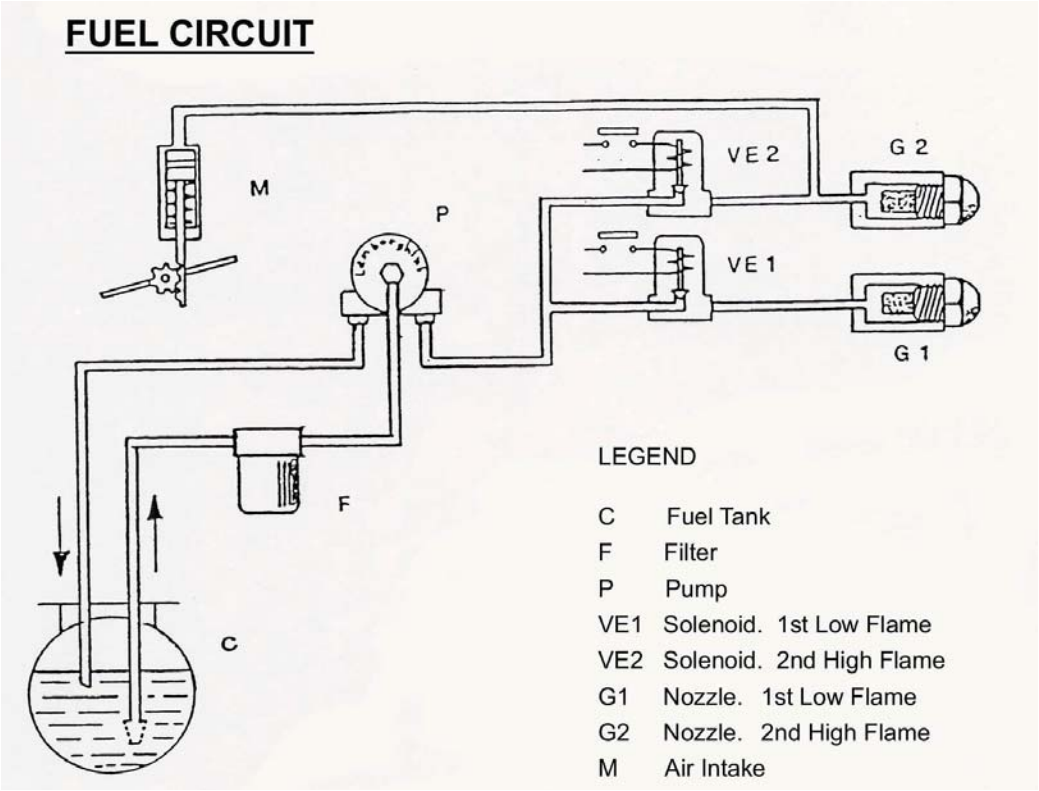

8 STORAGE

FOR OVER WINTER STORAGE IT IS ADVISABLE TO KEEP THE DRYER IN A COVERED AND DRY PLACE. SUITABLY PROTECT THE CONTROL PANEL AND THE DIESEL BURNER UNIT.

WHETHER THE MACHINE IS IN TRANSPORT MODE OR FULLY EXTENDED REMOVE THE WEIGHT FROM THE TYRES USING THE ADJUSTABLE JACKS.

9 ELECTRIC WIRING DIAGRAMS

WIRING DIAGRAMS - PLEASE REFER TO SEPARATE ATTACHMENT WHICH WILL REFER TO PARTICULAR MODEL, YEAR BUILD ETC.